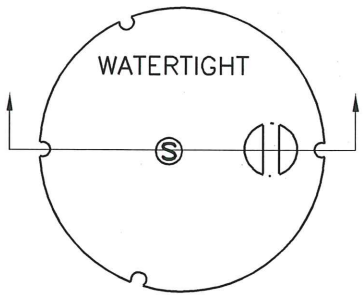

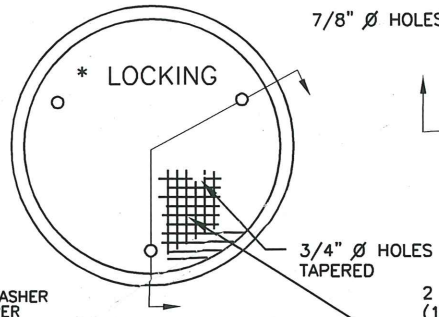

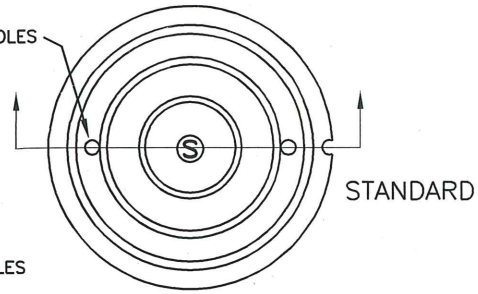

2 HOLE COVER, SANITARY SEWER
(16 HOLE STORM SEWER ONLY)
MANUFACTURED BY: OLYMPIC FOUNDRY, SEATTLE OR INLAND FOUNDRY, SPOKANE

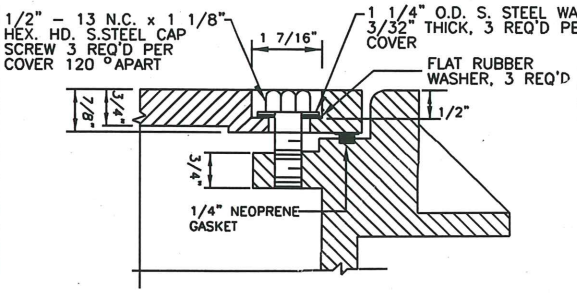

ALL GROOVES 1/8" WIDE X 1/8" DEEP AND 3/4" O.C. INSIDE 21–3/4" Ø 1/8" GROOVE

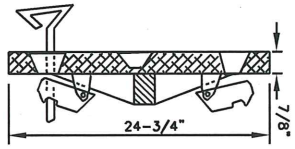

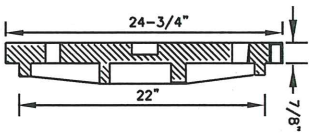

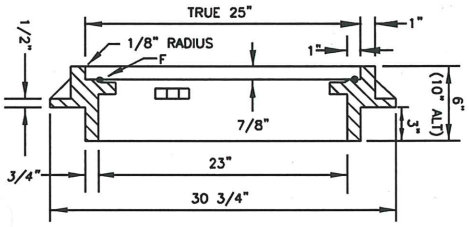

WATERTIGHT FRAME

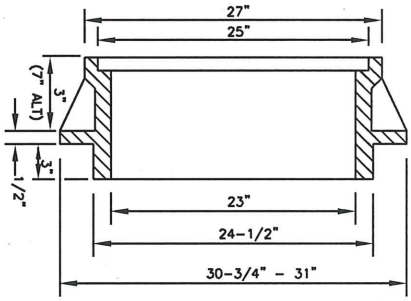

STANDARD & LOCKING FRAME

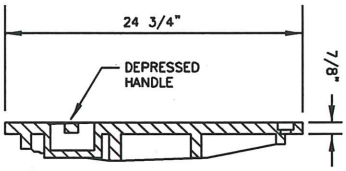

NOTES:

1. COVER & FRAME TO BE MACHINED TO A TRUE BEARING ALL AROUND.
2. MATERIAL SHALL BE OF GREY CAST IRON. A.S.T.M. A–48, CLASS 30.

* LOCKING FRAME AND COVER SHALL BE USED ON ALL SANITARY MANHOLES LOCATED IN EASEMENTS OUTSIDE OF PAVED AREAS.

STANDARD MANHOLE FRAMES & COVERS

PLAN #

THE CITY OF BATTLE GROUND

CITY OF BATTLE GROUND
APPROVED

3-28-07

CITY ENGINEER DATE

REVISIONS:	DATE:	DRAWN:	DESIGNED:
1	8/12/98	BSG	GGH
2	8/30/05	ALL	MCH
3	3/28/07	JMH	MCH

SS–2.3

N:\CAD Data\Standard Dwgs\Sanitary Sewer Details\SS-2.3_MH Frames&Covers.dwg 3/28/2007 2:01:07 PM