LANE INTERNATIONAL CORPORATION POLYPROPYLENE MANHOLE SAFETY STEP P-14850 WITH REFLECTORS.

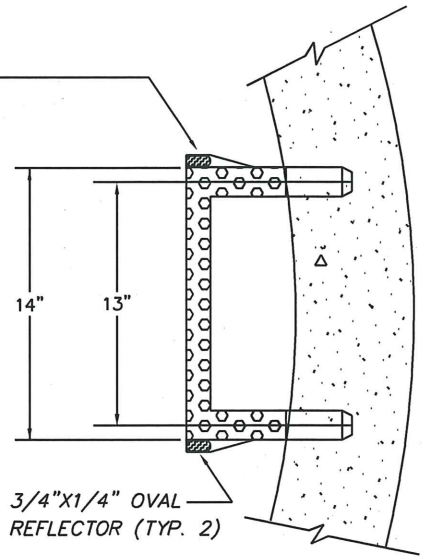

PLAN

NOTES:

All steps must meet ASTM C-478 and AASHTO M-199 Specifications, polypropylene ASTM D-4104, the 1/2" Grade 60 deformed reinforcing bar ASTM-A--615.

Installation method must resist 1,500 lb. horizontal pull out force and 500 lb. vertical load.

Locate steps over bench whenever possible (not over the main).

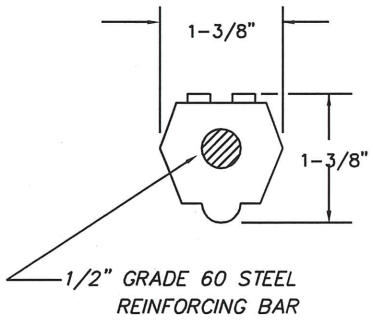

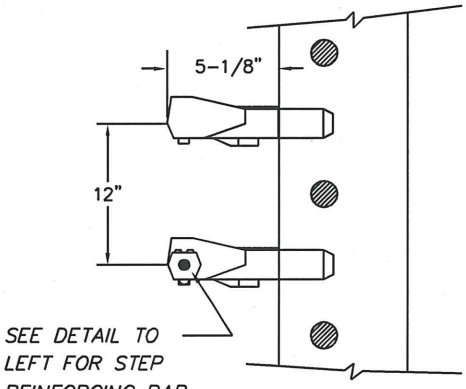

ELEVATION

STEP DETAIL

PLAN #

CITY OF BATTLE GROUND APPROVED

3-28-07

CITY ENGINEER DATE

REVISIONS:	DATE:	DRAWN:	DESIGNED:
1	8/12/98	BSG	GGH
2	8/30/05	ALL	MCH
3	3/28/07	JMH	MCH

SS-2.4

N:\CAD Data\Standard Dwgs\Sanitary Sewer Details\SS-2.4 MH step.DWG, 3/28/2007 2:01:41 PM