NOTES

1 WHERE DIRECTED BY THE ENGINEER GRANULAR TRENCH FOUNDATION STABILIZATION SHALL BE PLACED PRIOR TO PLACEMENT OF THE BEDDING, SIZE AND DEPTH ARE DEPENDENT ON SOIL CONDITIONS.

2 BEDDING AND BACKFILL MATERIALS IN THE PIPE ZONE SHALL BE COMPACTED AS SPECIFIED PRIOR TO BACKFILLING THE REMAINDER OF THE TRENCH.

LEDGEND:

OD = OUTSIDE DIAMETER
ID = INSIDE DIAMETER
d = DEPTH OF BEDDING MATERIAL BELOW PIPE

DEPTH OF BEDDING MATERIAL BELOW PIPE	
ID	d (min) 3
27" & SMALLER	4"
LARGER THAN 27"	6"

3 FOR ROCK AND OTHER INCOMPRESSIBLE MATERIALS, THE TRENCH SHALL BE OVER-EXCAVATED A MINIMUM OF 6" AND RE-FILLED WITH GRANULAR MATERIAL AS DIRECTED BY THE ENGINEER.

4 IMPORTED GRANULAR MATERIAL SHALL BE USED FOR UTILITY TRENCH BACKFILL.
THE CONTACTOR SHALL NOTIFY THE ENGINEER AT LEAST 72 HOURS PRIOR TO USE.
THE ENGINEER MAY APPROVE, REJECT OR REQUIRE LABORATORY TESTING OF THE MATERIAL.

5 TRENCH WIDTH SHALL NOT EXCEED ONE AND ONE-HALF THE INSIDE DIAMETER OF THE PIPE PLUS 18" AT THE TOP OF THE PIPE ZONE.

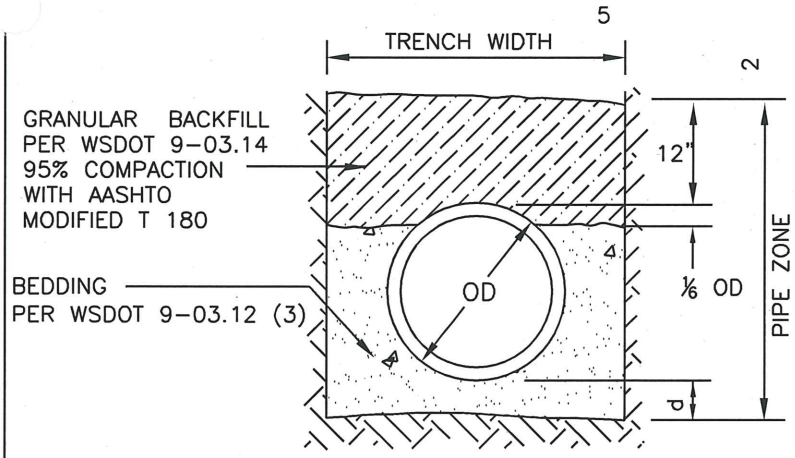

GRANULAR FOUNDATION

PIPE BEDDING (RIGID PIPE)

PLAN #

CITY OF BATTLE GROUND
APPROVED

3-29-07

CITY ENGINEER DATE

REVISIONS:	DATE:	DRAWN:	DESIGNED:
1	8/12/98	BSG	GGH
2	8/30/05	ALL	MCH
3	3/28/07	JMH	MCH

SS-4.0

N:\CAD Data\Standard Dwgs\Sanitary Sewer Details\SS-4.0_PipeBeddingRigid.dwg, 3/29/2007 8:43:24 AM, 8.5" x 11"