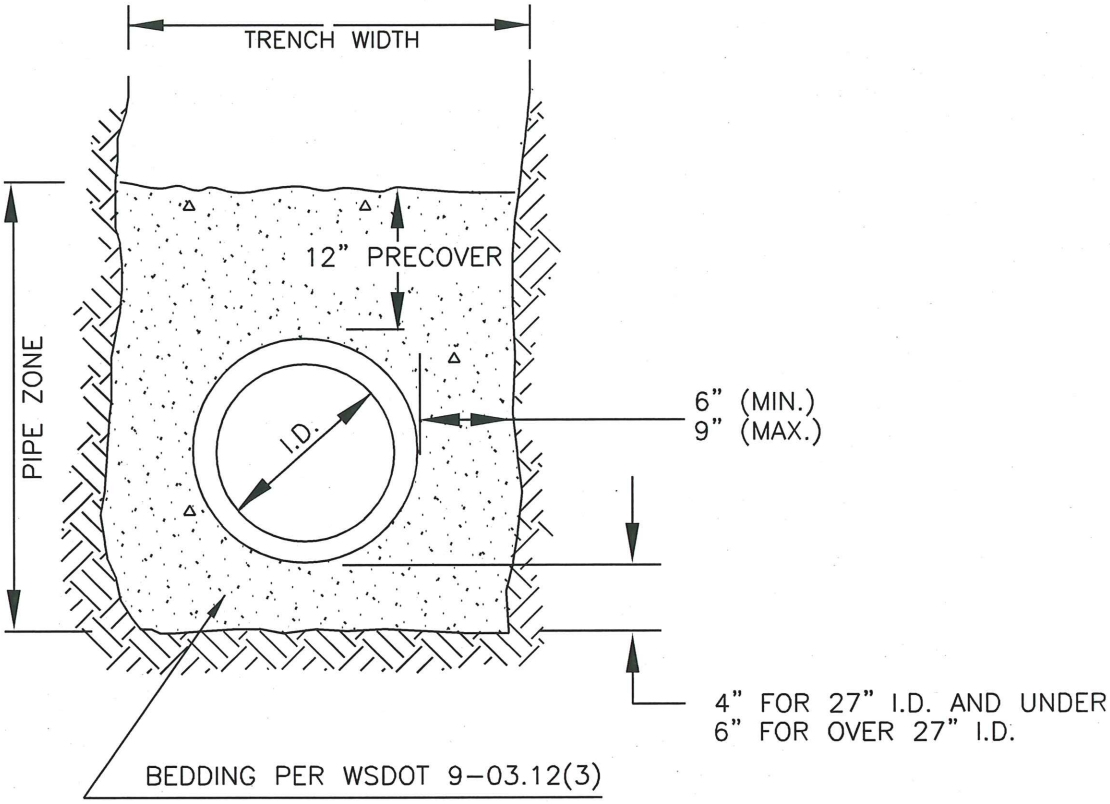

NOTES:

1. WHERE DIRECTED BY THE ENGINEER, GRANULAR TRENCH FOUNDATION STABILIZATION SHALL BE PLACED PRIOR TO PLACEMENT OF THE BEDDING. SIZE AND DEPTH ARE DEPENDENT ON SOIL CONDITIONS.

2. BEDDING AND BACKFILL MATERIALS IN THE PIPE ZONE SHALL BE COMPACTED AS SPECIFIED PRIOR TO BACK-FILLING THE REMAINDER OF THE TRENCH.

3. FOR ROCK AND OTHER INCOMPRESSIBLE MATERIALS, THE TRENCH SHALL BE OVEREXCAVATED A MINIMUM OF 6" AND REFILLED WITH GRANULAR MATERIALS AS DIRECTED BY THE ENGINEER.

4. ALTERNATIVE PRE-COVER MATERIALS ARE ALLOWABLE FROM PIPE CENTERLINE TO ONE FOOT ABOVE THE TOP OF PIPE. ALTERNATE PRE-COVER MATERIALS MUST BE PREAPPROVED BY THE INSPECTOR AND MAY BE SAND, CRUSHER SCREENINGS, GRAVEL, OR OTHER CLEAN GRANULAR MATERIAL CONTAINING NO ROCK LARGER THAN 1-1/4" IN LENGTH.

5. TRENCH WIDTH SHALL NOT EXCEED ONE AND ONE-HALF THE INSIDE DIAMETER OF THE PIPE PLUS 18" AT THE TOP OF THE PIPE ZONE.

6. APPROVAL FOR SUCH ALTERNATE MATERIALS WILL BE GRANTED UPON CONFIRMATION BY TEST OF ITS COMPLIANCE WITH THESE REQUIREMENTS.

PIPE BEDDING (FLEXIBLE PIPE)

PLAN #

THE CITY OF BATTLE GROUND

CITY OF BATTLE GROUND
APPROVED

3-28-07

CITY ENGINEER DATE

REVISIONS:	DATE:	DRAWN:	DESIGNED:
1	8/12/98	BSG	GGH
2	8/30/05	ALL	MCH
3	3/28/07	JMH	MCH

SS-4.1

N:\CAD Data\Standard Dwgs\Sanitary Sewer Details\SS-4.1_PipeBeddingFlexible.dwg 3/28/2007 2:06:20 PM