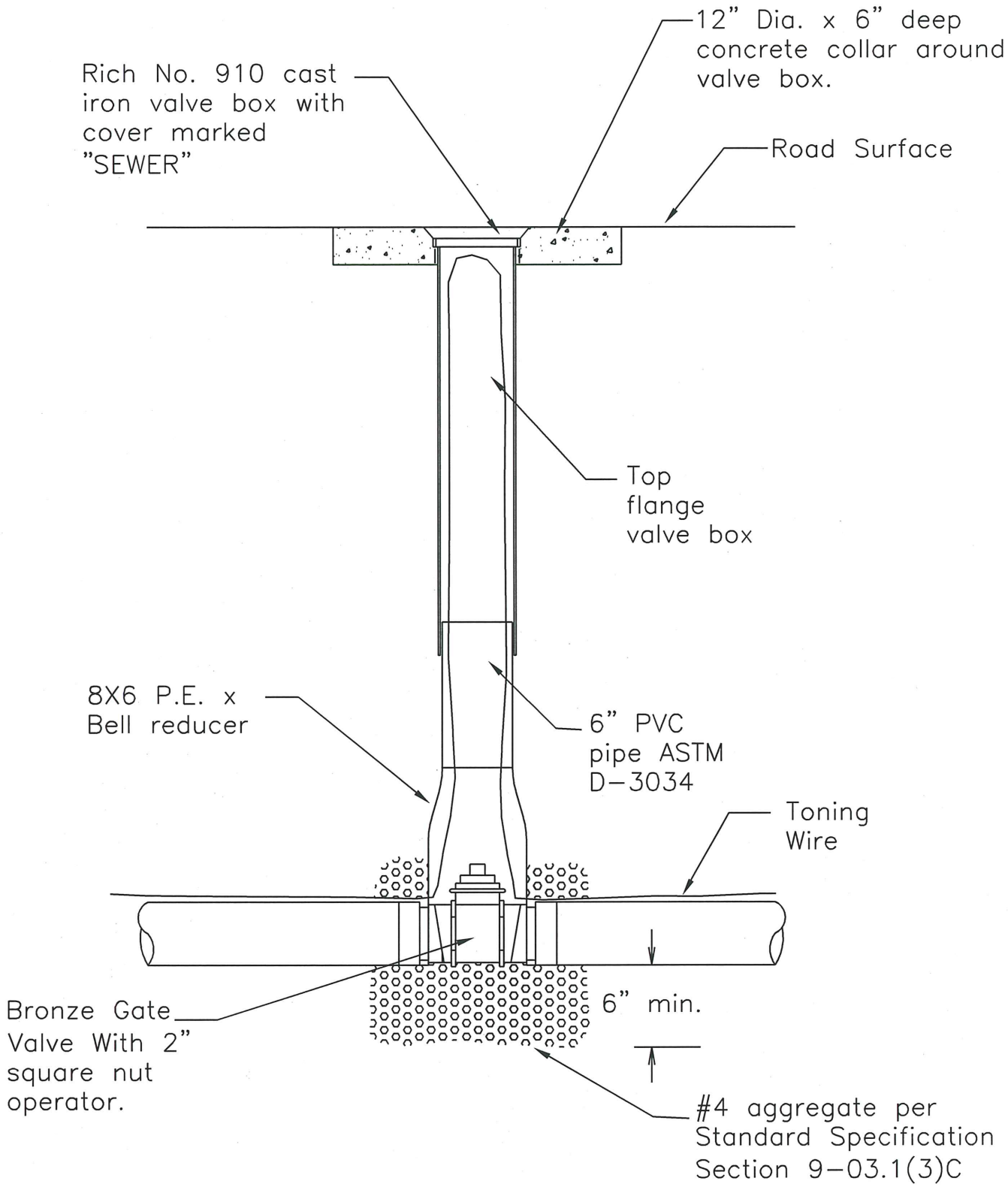

BURIED GATE VALVE

PLAN #

CITY OF BATTLE GROUND

CITY OF BATTLE GROUND APPROVED

3-28-07

CITY ENGINEER DATE

REVISIONS:	DATE:	DRAWN:	DESIGNED:
1	3/28/07	JMH	MCH

SS-5.1

rd Dwgs\Sanitary Sewer Details\SS-5.1_Buried Gate Valve.dwg, 3/28/2007 2:11:43 PM