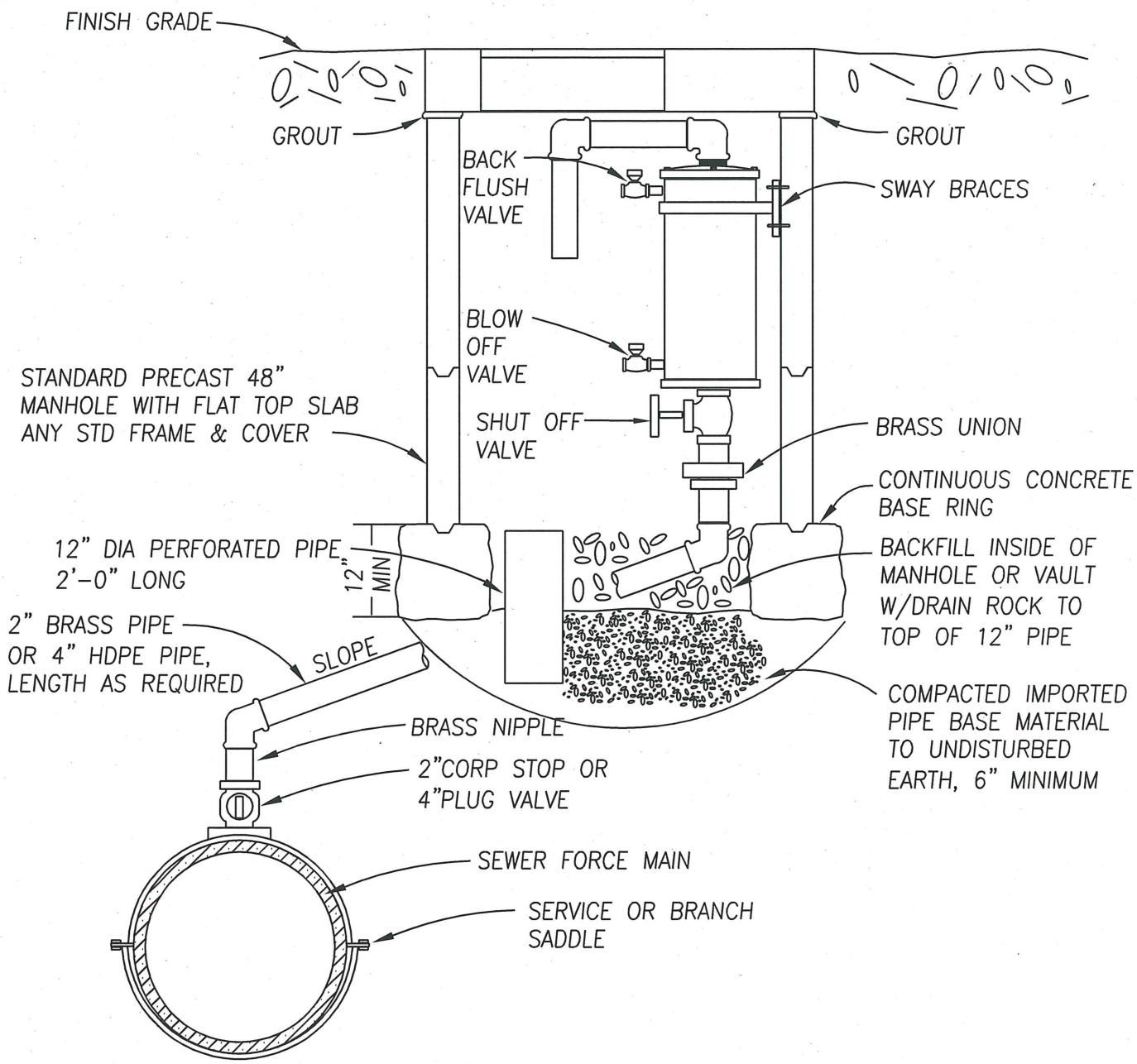

AIR RELEASE VALVE

PLAN #

CITY OF BATTLE GROUND
APPROVED

3-29-07

CITY ENGINEER DATE

REVISIONS:	DATE:	DRAWN:	DESIGNED:
1	12/9/06	JMH	MCH

SS-5.4

N:\CAD Data\ARCHIVE\standard dwgs\2006\Sanitary Sewer Details\leftovers\SS-5.4_Air Release Valve.dwg, 3/29/2007 8:43:37 AM, 8.5" x 11"