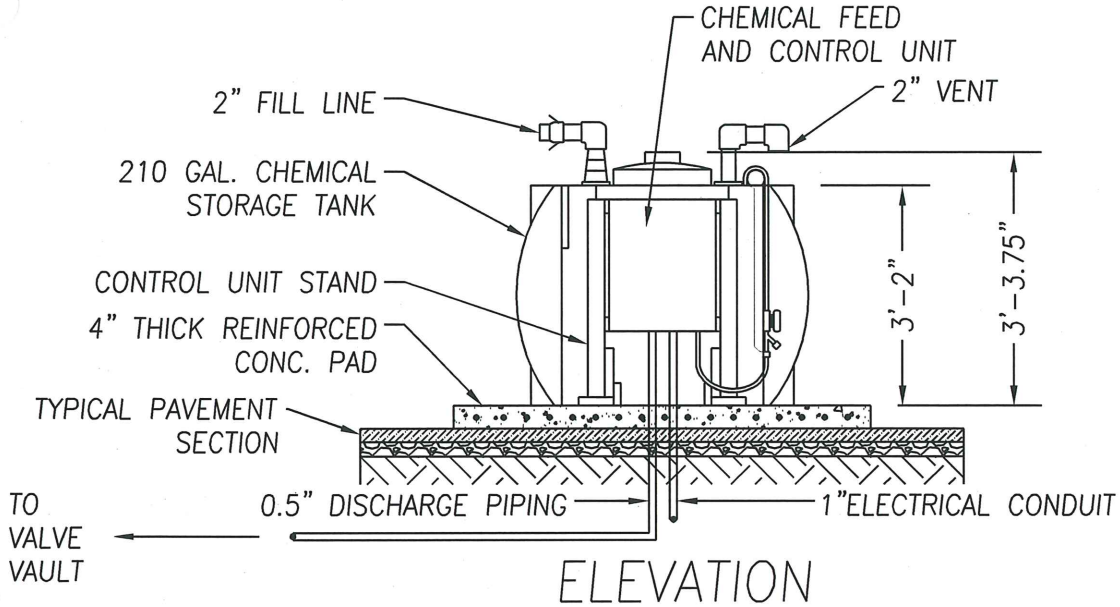

ELEVATION
NTS

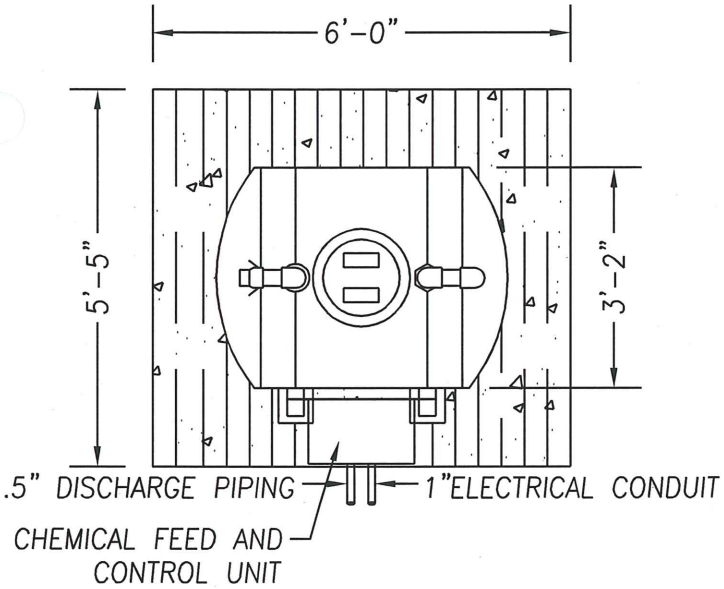

PLAN VIEW
NTS

NOTES:

1. ALL PIPING AND APPURTENANCES PVC, SCHEDULE 80, UNLESS SPECIFIED OTHERWISE.
2. UTILIZE SWEEPS ONLY (NO ELBOWS) FOR CONDUIT DIRECTIONAL CHANGES.
3. FURNISH AND INSTALL ALL NECESSARY WALL AND SLAB OPENINGS, SLEEVES AND SEALANT.
4. FURNISH AND INSTALL ALL NECESSARY HANGERS, SUPPORTS, AND BLOCKING FOR PIPING.
5. ALL HARDWARE REQUIRED FOR INSTALLATION SHALL BE STAINLESS STEEL.
6. CONTACT SUPPLIER (US FILTER/DAVIS PRODUCTS) TO DETERMINE WHICH PORTIONS OF THE INSTALLATION MUST BE DONE BY OTHERS.

BIOXIDE FEED SYSTEM

PLAN #

THE CITY OF BATTLE GROUND

CITY OF BATTLE GROUND
APPROVED

3-28-07

CITY ENGINEER DATE

REVISIONS:	DATE:	DRAWN:	DESIGNED:
1	3/28/07	JMH	MCH

SS-6.3

N:\CAD Data\Standard Dwgs\Sanitary Sewer Details\SS-6.3_Bioxide Feed System.dwg 3/28/2007 2:18:34 PM