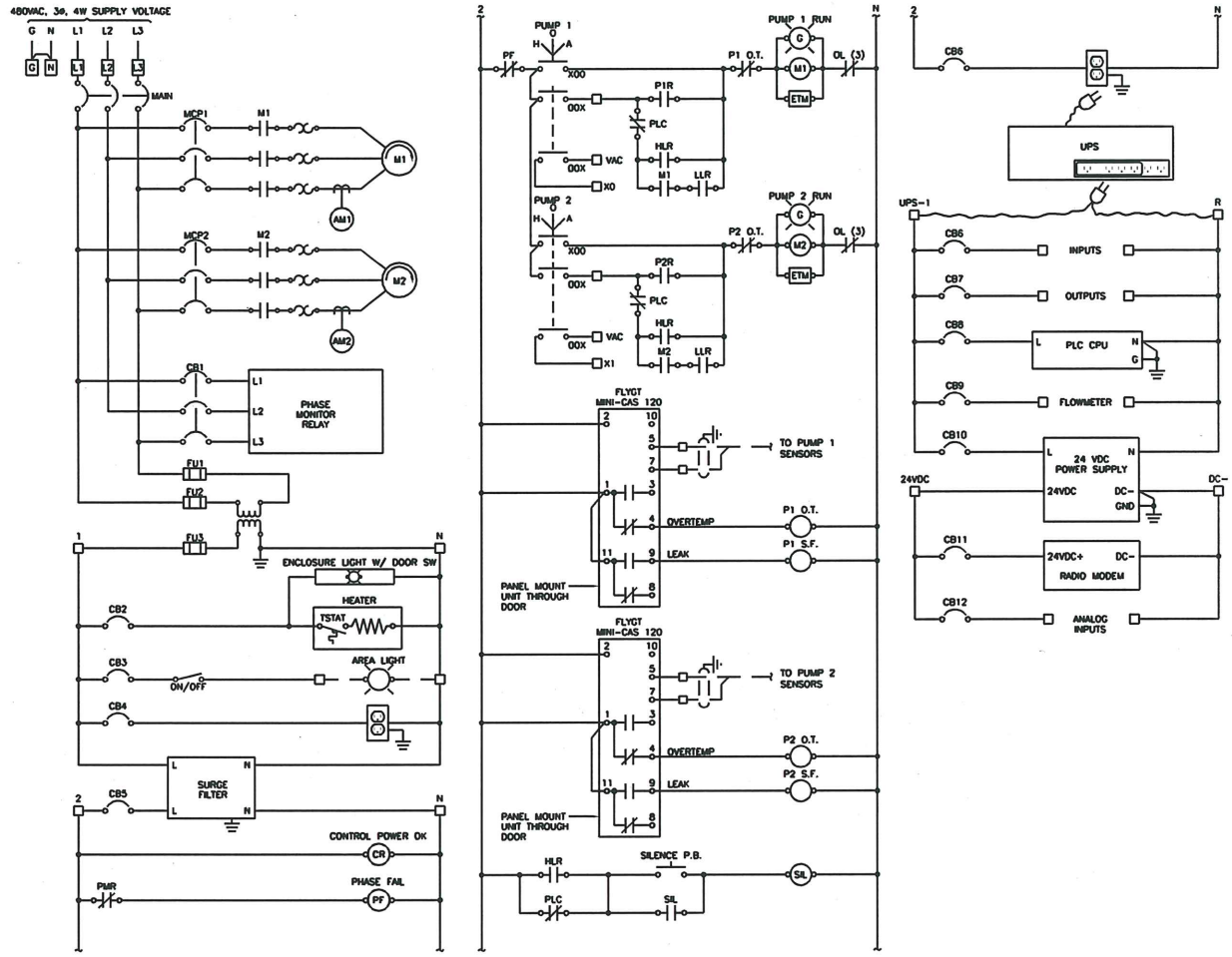

ELECTRICAL DETAILS 1

PLAN #

CITY OF BATTLE GROUND
APPROVED

3-28-07

CITY ENGINEER DATE

REVISIONS:	DATE:	DRAWN:	DESIGNED:
1	3/28/07	JMH	MCH

SS-6.5

N:\CAD Data\Standard Dwgs\Sanitary Sewer Details\SS-6.5_Electrical 01.dwg, 3/28/2007 2:20:09 PM