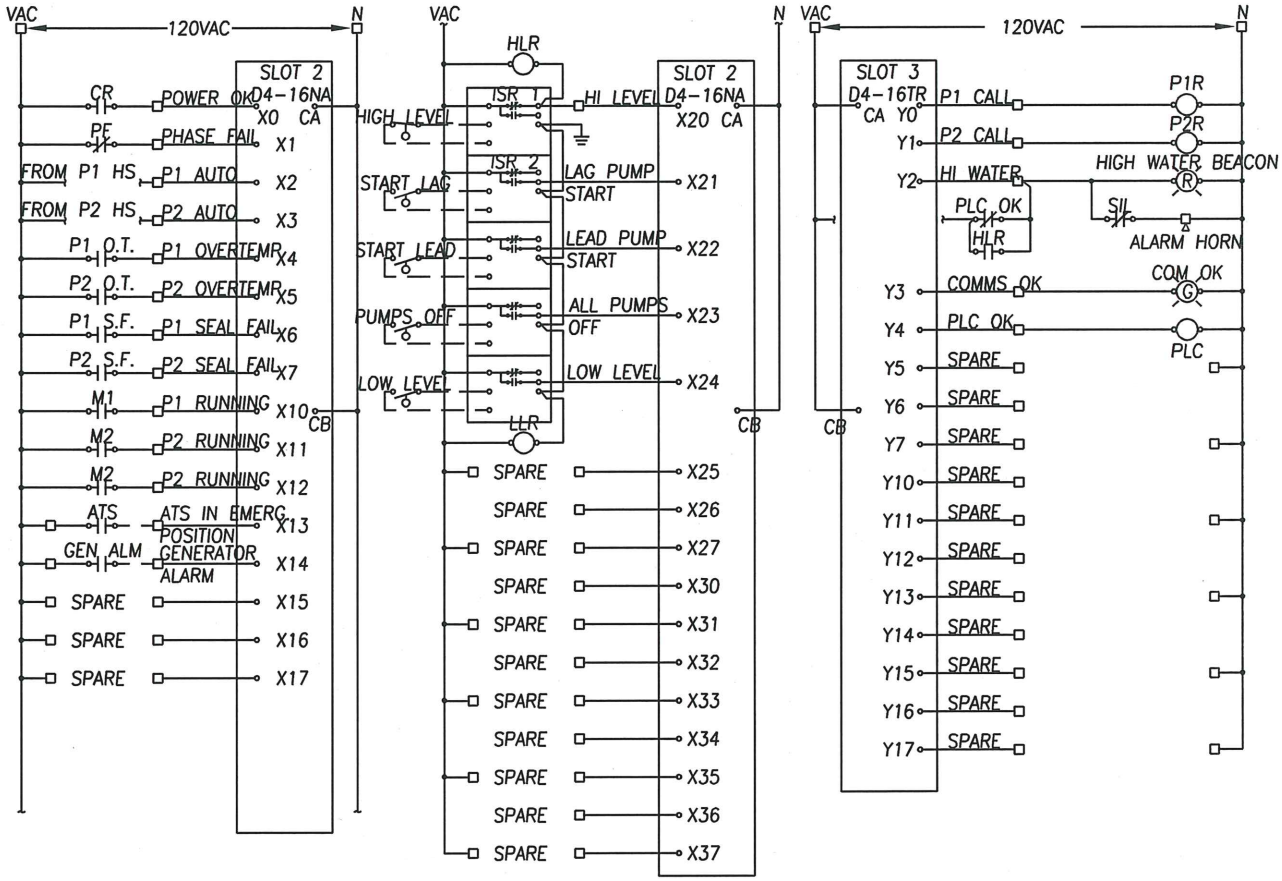

ELECTRICAL DETAILS 2

PLAN #

CITY OF BATTLE GROUND
APPROVED

3-28-07

CITY ENGINEER DATE

REVISIONS:	DATE:	DRAWN:	DESIGNED:
1	3/28/07	JMH	MCH

SS-6.6

N:\CAD Data\Standard Dwgs\Sanitary Sewer Details\SS-6.6_Electrical 02.dwg, 3/28/2007 2:20:54 PM