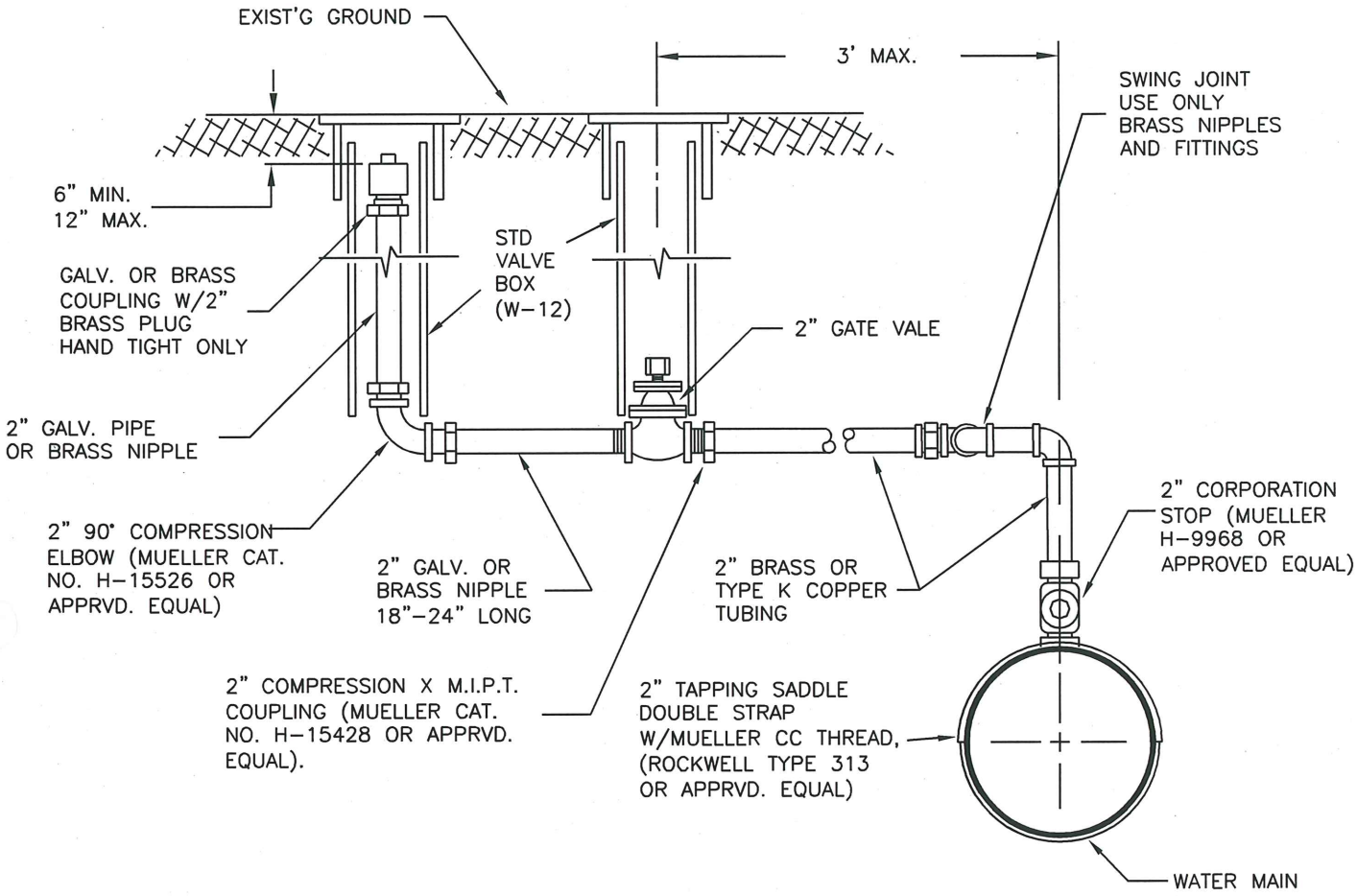

STANDARD MANUAL AIR RELEASE VALVE

PLAN #

THE CITY OF BATTLE GROUND

CITY OF BATTLE GROUND
APPROVED

CITY ENGINEER — DATE 4/16/07

REVISIONS:	DATE:	DRAWN:	DESIGNED:
1	4/16/07	JMH	MCH

WA-4.0

N:\CAD Data\Standard Dwgs\Water Details\WA-4.0_Stand Man Air Rel valve.dwg, 4/16/2007 8:55:35 AM