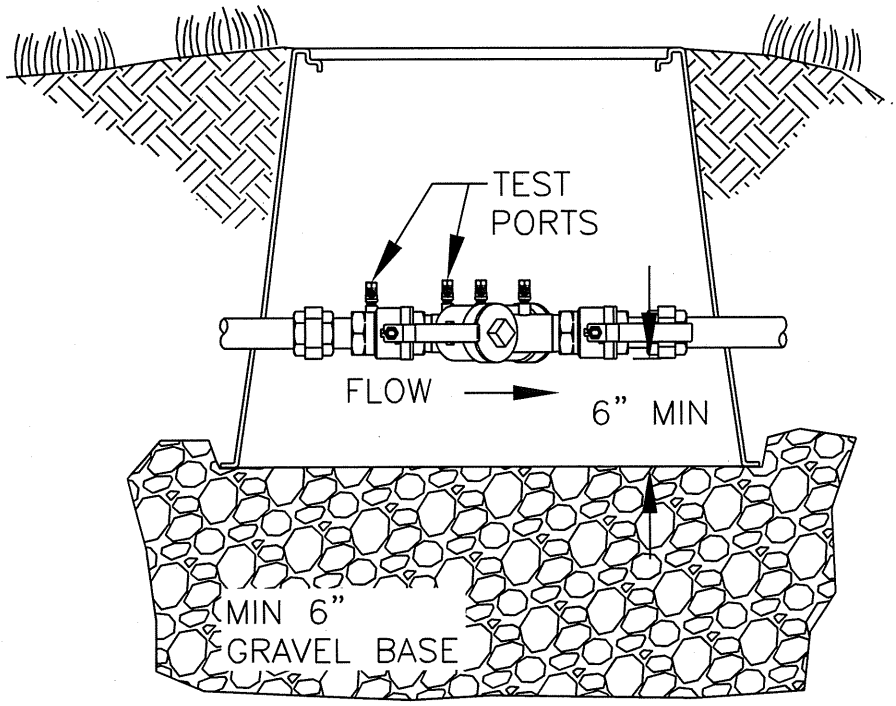

ELEVATION

NOTES:

1. APPROVED DOUBLE CHECK VALVE ASSEMBLY (DCVA) TO LAY HORIZONTAL WITH GROUND. (VERTICAL ALLOWED IF APPROVED BY WA. DEPT. OF HEALTH)
2. DCVA MAY BE INSTALLED ABOVE OR BELOW GROUND PROVIDED ALL CLEARANCES ARE MET.
3. DESIGN FOR BACK SIPHONAGE AND BACK PRESSURE.
4. TEST COCKS TO EITHER FACE OUTWARDS OR UPWARDS FROM ASSEMBLY.
5. THOROUGHLY FLUSH LINES PRIOR TO INSTALLATION OF BACKFLOW PREVENTER.
6. DO NOT INSTALL IN AN AREA SUBJECT TO FLOODING.
7. DCVA MUST BE ACCESSIBLE.
8. PROTECT DCVA FROM FREEZING.
9. DCVA SHALL BE APPROVED BY THE STATE OF WASHINGTON
10. A PLUMBING PERMIT IS REQUIRED–CONTACT THE APPROPRIATE JURISDICTION'S PERMITS COUNTER
11. DCVA MUST BE TESTED AFTER INSTALLATION, THEN ANNUALLY BY A WA. STATE CERTIFIED BACKFLOW TESTER. RESULTS SHALL BE SENT TO THE CITY OF BATTLE GROUND OPERATIONS CENTER.

DCVA INSTALLATION

PLAN #

THE CITY OF BATTLE GROUND

CITY OF BATTLE GROUND
APPROVED

9/24/07

CITY ENGINEER DATE

REVISIONS:	DATE:	DRAWN:	DESIGNED:
1	4/16/07	CMS	MCH
2	9/24/07	MCH	MCH

WA–5.2