STANDARD NOTES FOR EROSION CONTROL PLAN

1. THE CONTRACTOR SHALL INSTALL AND MAINTAIN BMP'S AS SHOWN AND PERFORM ALL ACTIONS NECESSARY TO PREVENT EROSION, AND CONTROL SEDIMENT FROM LEAVING THE CONSTRUCTION SITE. CONTRACTOR SHALL COMPLY WITH THE CITY OF BATTLE GROUND MUNICIPAL CODE 18.255.

2. ALL EROSION CONTROL MEASURES SHALL BE IN-PLACE AND IN WORKING CONDITION PRIOR TO DISTURBING AND EXPOSING ANY SOIL SURFACES.

3. ALL EROSION PREVENTION AND CONTROL BMP'S SHALL BE MAINTAINED AND REPAIRED AS NEEDED TO INSURE CONTINUED PERFORMANCE OF THEIR INTENDED FUNCTION. NEEDED REPAIRS SHALL BE MADE AS SOON AS POSSIBLE. THEY ARE TO REMAIN IN PLACE AND OPERATIONAL DURING ALL PHASES OF CONSTRUCTION. CONSTRUCTION ACTIVITIES SHALL NOT CONTINUE OR RESUME UNTIL REPAIRS TO EROSION CONTROL FACILITIES ARE MADE AND THE FACILITIES ARE FUNCTIONAL. ANY SEDIMENT LEAVING THE SITE OR DISCHARGING TO A SENSITIVE AREA SHALL BE STOPPED AND CONTROLLED IMMEDIATELY. CONTAMINATED AREAS SHALL BE CLEANED AND RESTORED.

4. CLEARING LIMITS AND WORK AREA LIMITS SHALL BE DELINEATED AND MARKED. DO NOT DISTURB MORE AREA THAN NEEDED FOR CONSTRUCTION REQUIREMENTS.

5. ALL SENSITIVE OR CRITICAL AREAS (WETLANDS, STEEP SLOPES, NATURAL WATERWAYS) AND BUFFERS SHALL BE CLEARLY DELINEATED AND MARKED AND PROTECTED FROM SEDIMENT DEPOSITION.

6. SEDIMENT LADEN RUNOFF SHALL BE PREVENTED FROM ENTERING ALL EXISTING STORM WATER CATCH BASINS AND INLETS.

7. NO DENUDED SOILS SHALL REMAIN UNSTABILIZED FOR MORE THAN TWO DAYS DURING THE PERIOD OCTOBER 1 THRU APRIL 30 OR FOR MORE THAN SEVEN DAYS DURING THE PERIOD OF MAY 1 THROUGH SEPTEMBER 30. ALL DISTURBED SOIL SURFACES SHALL BE STABILIZED BY A SUITABLE BMP.

8. WHERE FEASIBLE, NO MORE THAN 500 FEET OF TRENCH SHALL BE OPEN AT ONE TIME. EXCAVATED MATERIAL SHALL BE PLACED ON THE UP-HILL SIDE OF TRENCHES PROVIDED IT DOES NOT CONFLICT WITH SAFETY REQUIREMENTS.

9. DEWATERING DEVICES SHALL DISCHARGE INTO A SEDIMENT TRAP OR SEDIMENT POND. NO DISCHARGE SHALL BE MADE TO A PAVED STREET OR STORMWATER COLLECTION SYSTEM WITHOUT FIRST REMOVING SEDIMENT.

10. SLOPES SHALL BE CONSTRUCTED IN A MANNER THAT WILL MINIMIZE EROSION. RUNOFF SHALL BE PREVENTED FROM UNDERCUTTING THE BASE OF SLOPES.

11. ANY SOIL OR DEBRIS TRANSPORTED ONTO ROADWAYS AND SIDEWALKS SHALL BE REMOVED. DEPOSITS SHALL BE COMPLETELY REMOVED BY SHOVELING AND/OR SWEEPING. WASHING SHALL NOT BE UTILIZED UNLESS SPECIFICALLY APPROVED IN WRITING BY THE CITY. SHOULD THERE BE ANY EVIDENCE OF SEDIMENT, MUD, OR DEBRIS BE TRANSPORTED ONTO A ROAD SURFACE, IT WILL BE CLEANED IMMEDIATELY AND A WHEEL WASH SHALL BE INSTALLED.

12. ALL CONVEYANCE CHANNELS, BOTH TEMPORARY AND PERMANENT SHALL BE STABILIZED TO PREVENT EROSION OF THE CHANNEL. STABILIZATION SHALL EXTEND TO AREAS AT OUTLETS AND DOWNSTREAM REACHES VULNERABLE TO EROSION.

13. IF SPECIFIED BMP'S ARE UTILIZED BUT ARE INSUFFICIENT TO PREVENT SEDIMENT FROM REACHING WATER BODIES, ADJACENT PROPERTIES, OR PUBLIC RIGHTS-OF-WAY THEN ADDITIONAL BMP'S SHALL BE IMPLEMENTED IMMEDIATELY.

14. STABILIZED AREAS SHALL BE PROVIDED FOR EMPLOYEE PARKING AND STORAGE OF CONSTRUCTION MATERIALS. EROSION CONTROL BMP'S SHALL BE UTILIZED AS NECESSARY TO PREVENT SEDIMENT LADEN RUNOFF FROM LEAVING OR SEDIMENT BEING TRANSPORTED FROM THESE AREAS FROM VEHICLE ACTIVITY.

15. INLET PROTECTION MUST ALLOW FOR OVERFLOW IN A SEVERE STORM EVENT.

16. REPAIR OR REPLACE MATERIALS AS NEEDED TO ENSURE PROPER FUNCTION.

SHEET 1 OF 2 N.T.S.

EROSION CONTROL GENERAL NOTES

STANDARD DETAIL

THE CITY OF BATTLE GROUND

CITY OF BATTLE GROUND APPROVED

Scott P. Sawyer 9-16-10

CITY ENGINEER DATE

REVISIONS:	DATE:	DRAWN:	DESIGNED:
1	8/12/98	BSG	GGH
2	8/30/05	ALL	ALL
3	9/15/10	RMJ	RMJ

EC-1.0A

STANDARD NOTES FOR EROSION CONTROL PLAN (CONTINUED)

17. ALL POLLUTANTS THAT OCCUR DURING CONSTRUCTION SHALL BE HANDLED AND DISPOSED OF IN A MANNER THAT DOES NOT CAUSE CONTAMINATION OF STORM WATER.

18. ALL EROSION AND SEDIMENT CONTROL BMPS SHALL BE REGULARLY INSPECTED, MAINTAINED, AND REPAIRED AS NEEDED BY THE PROPERTY OWNER OR PERMIT HOLDER TO ENSURE CONTINUED PERFORMANCE OF THEIR INTENDED FUNCTION. A MAINTENANCE LOG SHALL BE PROVIDED AND KEPT AS PERMANENT RECORD. THE MAINTENANCE LOG SHALL BE IN A DESIGNATED ON-SITE LOCATION. INSPECT ONCE DAILY ON ACTIVE SITES, ONCE EVERY TWO WEEKS ON INACTIVE SITES, AND WITHIN 24 HOURS FOLLOWING A 0.5 INCH RAIN EVENT.

19. ALL CONSTRUCTION ACTIVITIES SHALL BE SUPERVISED BY AN INDIVIDUAL WHO SHALL HAVE SUCCESSFULLY COMPLETED FORMAL TRAINING IN EROSION AND SEDIMENT CONTROL DURING CONSTRUCTION BY A RECOGNIZED ORGANIZATION ACCEPTABLE TO THE CITY. A CERTIFICATION OR SUFFICIENT EVIDENCE OF SUCCESSFUL COMPLETION OF SUCH TRAINING SHALL BE SUBMITTED PRIOR TO CONSTRUCTION.

20. ALL TEMPORARY BMP'S SHALL BE REMOVED WITHIN 30 DAYS AFTER FINAL SITE STABILIZATION IS ACHIEVED.

21. CONSTRUCTION SHALL NOT BE CONSIDERED COMPLETE AND ACCEPTABLE UNTIL ALL DISTURBED SOIL SURFACES HAVE BEEN PROTECTED FROM EROSION.

22. VEGETATED STABILIZATION AND LANDSCAPING SHALL BE FERTILIZED, WATERED AND MAINTAINED TO ENSURE THAT GROWTH OF VEGETATION IS ESTABLISHED AND SUSTAINED.

23. DURING DRY WEATHER CONSTRUCTION PERIODS THE CONTRACTOR SHALL PROVIDE PROJECT-SPECIFIC DUST CONTROL MEASURES. THE CONTRACTOR SHALL MAINTAIN THE DUST CONTROL MEASURES THROUGH DRY WEATHER PERIODS UNTIL ALL DISTURBED AREAS HAVE BEEN STABILIZED. IMMEDIATELY RE-STABILIZE AREAS DISTURBED BY CONTRACTOR'S OPERATIONS OR OTHER ACTIVITIES (WIND, WATER, VANDALISM, ETC.).

24. ENTRY ONTO THE CONSTRUCTION SITE SHALL BE RESTRICTED TO A SINGLE APPROVED ENTRANCE AS SHOWN ON THE PLAN.

25. MAINTENANCE AND REPAIR OF HEAVY EQUIPMENT AND VEHICLES WHICH INVOLVE POTENTIAL CONTAMINANTS (OIL,SOLVENTS,HYDRAULIC FLUID, ETC.) MUST BE CONDUCTED IN A MANNER WHICH PREVENTS CONTAMINATION OF SOILS, SURFACE WATER AND GROUND WATER. TARPS, DRIP PANS, OR OTHER APPROPRIATE MEASURES SHALL BE USED AS NECESSARY.

26. STRIPPING, TOPSOIL, AND UNSUITABLE MATERIAL STOCKPILES SHALL BE HYDROSEEDED. MAINTENANCE OF STOCKPILE AREAS AND REAPPLICATION OF HYDROSEED COVERING SHALL BE REQUIRED IF BARE SOIL IS PRESENT.

TEMPORARY EROSION CONTROL SEED MIX

	% WEIGHT	% PURITY	% GERMINATION
CHEWINGS OR ANNUAL BLUE GRASS *FESTUCA RUBRA VAR. COMMUTATA OR POA ANNA*	40	98	90
PERENNIAL RYE - *LOLIUM PERENNE*	50	98	90
REDTOP OR COLONIAL BENTGRASS *AGROSTIS ALBA* OR *AGROSTIS TENUIS*	5	92	85
WHITE DUTCH CLOVER *TRIFOLIUM REPENS*	5	98	90

27. THE CONTRACTOR SHALL REMOVE ALL ACCUMULATED SEDIMENT FROM THE CATCH BASINS, DRYWELLS, UTILITY TRENCHES, AND STORM PIPES PRIOR TO ACCEPTANCE BY THE CITY.

SHEET 2 OF 2 N.T.S.

EROSION CONTROL GENERAL NOTES

STANDARD DETAIL

THE CITY OF BATTLE GROUND

CITY OF BATTLE GROUND
APPROVED

Scott P. Sawyer 9-16-10

CITY ENGINEER DATE

REVISIONS:	DATE:	DRAWN:	DESIGNED:
1	8/12/98	BSG	GGH
2	8/30/05	ALL	ALL
3	9/15/10	RMJ	RMJ

EC-1.0B

MATTING NOTES:

1. THERE ARE A WIDE RANGE OF MATERIALS AND COMBINATION OF MATERIALS USED TO PRODUCE MATTING INCLUDING, BUT NOT LIMITED TO: STRAW, JUTE, WOOD FIBER, COIR (COCONUT FIBER), PLASTIC NETTING, AND BONDED FIBER MATRIX.

2. GENERALLY, MATTING IS USED ON SLOPES 2:1 AND STEEPER.

3. SURFACE MUST BE GRADED SMOOTH TO REMOVE ALL DEBRIS AND UNDULATIONS LARGER THAN 2" IN ANY DIRECTION.

4. APPLY SEED AND FERTILIZER PRIOR TO MATTING. INSTALL SO THAT MATTING IS IN COMPLETE CONTACT WITH SOIL SURFACE.

5. ORGANIC MATTING MATERIALS (EXCELSIOR, JUTE, AND COIR) BIODEGRADE AND ARE USEFUL FOR APPLICATIONS REQUIRING STABILIZATION FOR UP TO THREE MONTHS. USE ORGANIC BLANKETS, WHICH RETAIN MOISTURE AND PROVIDE ORGANIC MATTER TO THE SOIL, FOR SLOPE PROTECTION AND SHORT–TERM WATERWAY PROTECTION AND TO IMPROVE THE SPEED AND SUCCESS OF REVEGETATION.
   - EXCELSIOR BRAND (ASPEN WOOD FIBER), WOVEN STRAW, AND COIR BLANKETS MAY BE INSTALLED WITHOUT MULCH BECAUSE THEY PROVIDE COMPLETE SURFACE PROTECTION.

6. SYNTHETIC MATS ARE MADE FROM NON–BIODEGRADABLE MATERIALS AND WILL REMAIN IN PLACE FOR YEARS (SOME PHOTODEGRADATION DOES OCCUR). USE SYNTHETIC BLANKETS FOR LONG–TERM (LONGER THAN 3 MONTHS) STABILIZATION OF WATERWAYS.
   - TURF REINFORCEMENT MATS (TRM) ARE MADE FROM POLYMER NETTING OR MONOFILAMENTS FORMED INTO A SYNTHETIC 3–D MAT. TRMs PROTECT SEED AND INCREASE GERMINATION AND ALSO ACTS AS PART OF THE ROOT STRUCTURE; GIVING THE TURF HIGHER STRENGTH.
   - EROSION CONTROL AND REVEGETATION MATS (ECRM), COMPOSED OF HEAT–FUSED MONOFILAMENTS AND MONOFILAMENTS STITCHED BETWEEN NETTING ACT AS PERMANENT MULCH. ECRM ALLOW GROWTH THROUGH THE MAT.

7. REPAIR ANY DAMAGED AREAS OF THE NET OR BLANKET AND STAPLE INTO THE GROUND ANY AREAS NOT IN CLOSE CONTACT WITH THE GROUND SURFACE.

8. IF EROSION OCCURS, REPAIR AND PROTECT THE ERODED AREA.

N.T.S.

MATTING GENERAL NOTES					STANDARD DETAIL
THE CITY OF BATTLE GROUND	CITY OF BATTLE GROUND APPROVED	REVISIONS:	DATE:	DRAWN:	DESIGNED:	EC–1.1
		1	9/15/10	RMJ	RMJ	
	Scott R Sawyer 9-16-10					
	CITY ENGINEER DATE					

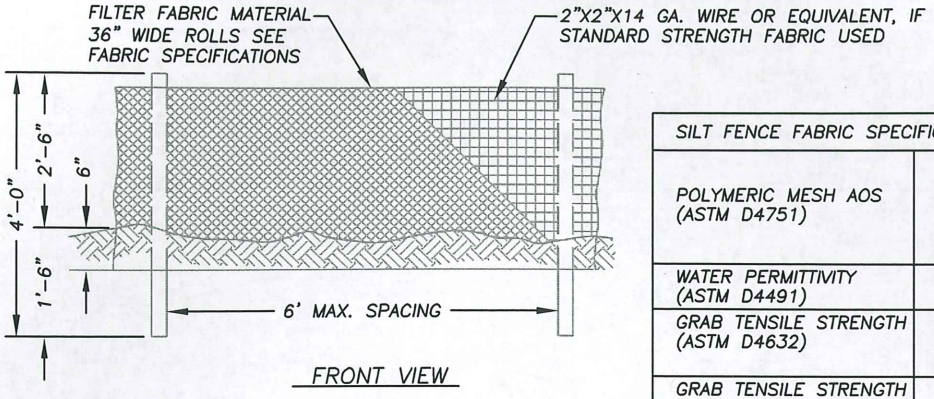

FRONT VIEW

SILT FENCE FABRIC SPECIFICATIONS	
POLYMERIC MESH AOS (ASTM D4751)	0.60 MM MAXIMUM FOR SLIT WOVENS (#30 SIEVE). 0.30 MM MAXIMUM FOR ALL OTHER GEOTEXTILE TYPES (#50 SIEVE). 0.15 MM MAXIMUM FOR ALL FABRIC TYPES (#100 SIEVE).
WATER PERMITTIVITY (ASTM D4491)	0.02 SEC^{-1} MINIMUM
GRAB TENSILE STRENGTH (ASTM D4632)	180 LBS. MINIMUM FOR EXTRA STRENGTH FABRIC. 100 LBS. MINIMUM FOR STANDARD STRENGTH FABRIC.
GRAB TENSILE STRENGTH (ASTM D4632)	30% MAXIMUM
ULTRAVIOLET RESISTANCE (ASTM D4355)	70% MAXIMUM

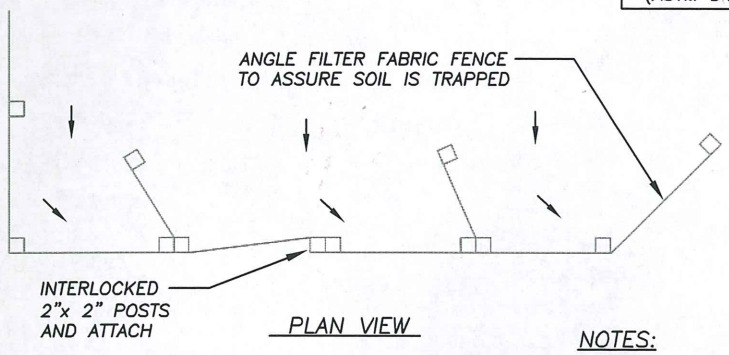

PLAN VIEW

NOTES:

1. BURY BOTTOM OF FILTER FABRIC 6" VERTICALLY BELOW FINISHED GRADE.
2. COMPACT BOTH SIDES OF FILTER FABRIC TRENCH.
3. SILT FENCE TO BE SPACED ON SLOPES PER TABLE BELOW.
4. SEDIMENT DEPOSITS MUST BE REMOVED WHEN DEPOSITS REACH APPROXIMATELY ONE-HALF THE HEIGHT OF THE BARRIER.
5. DAMAGED SILT FENCE SHALL BE REMOVED AND REPLACED PROMPTLY.
6. STAPLING OF SILT FENCE ONTO WOODEN POSTS IS NOT ALLOWED.
7. REFER TO BMP C233 IN VOLUME II OF THE WESTERN WASHINGTON MANUAL FOR MORE INFORMATION.

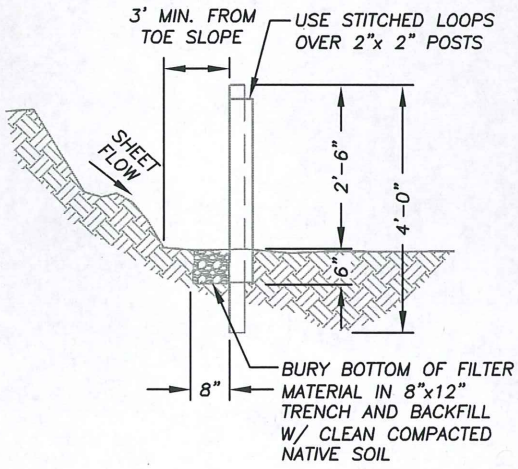

PROFILE

INSTALL PARALLEL ALONG CONTOURS AS FOLLOWS		
% SLOPE	SLOPE	MAX. SPACING ON SLOPE
10% FLATTER	10:1 OR FLATTER	300 FT.
10>%<15	10:1>x<7.5:1	150 FT.
15>%<20	7.5:1>x<5:1	100 FT.
20>%<30	5:1>x<3.5:1	50 FT.
30>%<50	3.5:1>x<2:1	25 FT.

N.T.S.

SILT FENCE

STANDARD DETAIL

THE CITY OF BATTLE GROUND

CITY OF BATTLE GROUND
APPROVED

Scott P. Savage 9-16-10

CITY ENGINEER DATE

REVISIONS:	DATE:	DRAWN:	DESIGNED:
1	8/12/98	BSG	GGH
2	8/30/05	ALL	MCH
3	9/15/10	RMJ	RMJ

EC-2.0

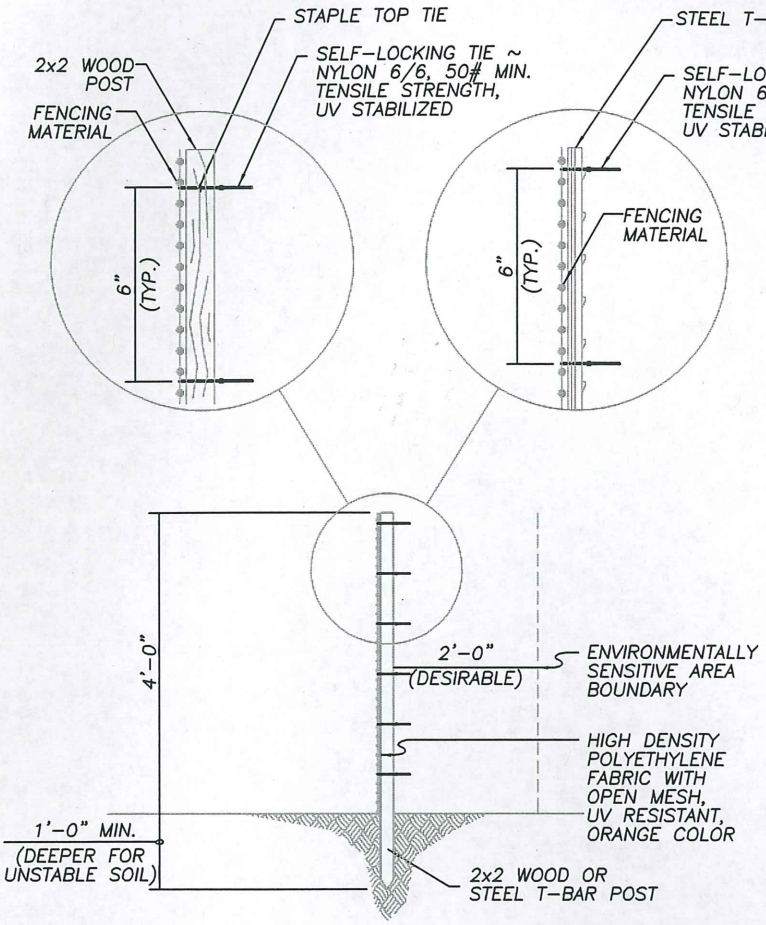

TYPICAL SECTION

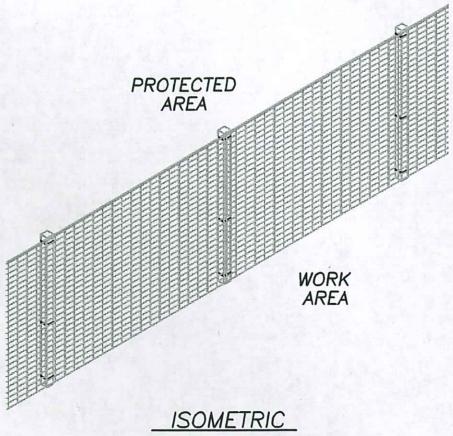

ISOMETRIC

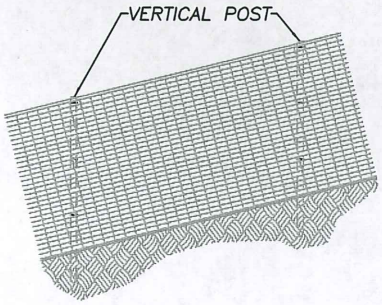

FENCE ON SLOPE

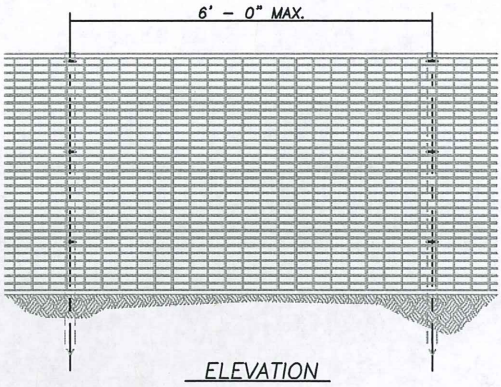

ELEVATION

NOTES:

1. FENCE TENSILE STRENGTH SHALL BE 360 LBS/FT PER ASTM D4595.
2. FENCE SHALL NOT BE STAPLED OR WIRED TO TREES.
3. ON LONG CONTINUOUS LENGTHS OF FENCING, TENSION WIRE OR ROPE SHALL BE USED AS A TOP STRINGER TO PREVENT SAGGING.
4. REFER TO BMP C103 IN VOLUME II OF THE WESTERN WASHINGTON MANUAL FOR MORE INFORMATION.

N.T.S.

HIGH VISIBILITY FENCE

STANDARD DETAIL

THE CITY OF BATTLE GROUND

CITY OF BATTLE GROUND
APPROVED

Scott P. Sawyer 9-16-10
CITY ENGINEER DATE

REVISIONS:	DATE:	DRAWN:	DESIGNED:
1	9/15/10	RMJ	RMJ

EC-2.1

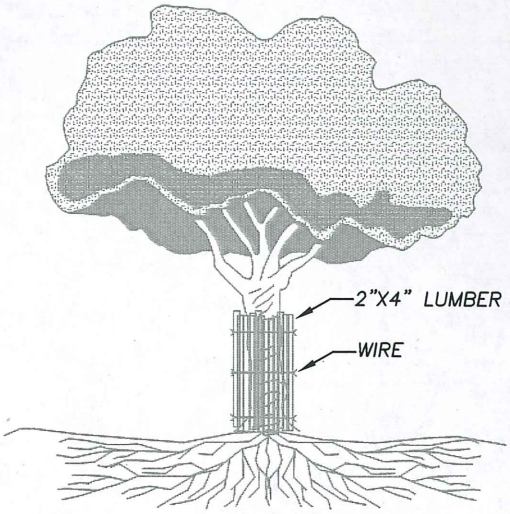

TRUNK PROTECTION

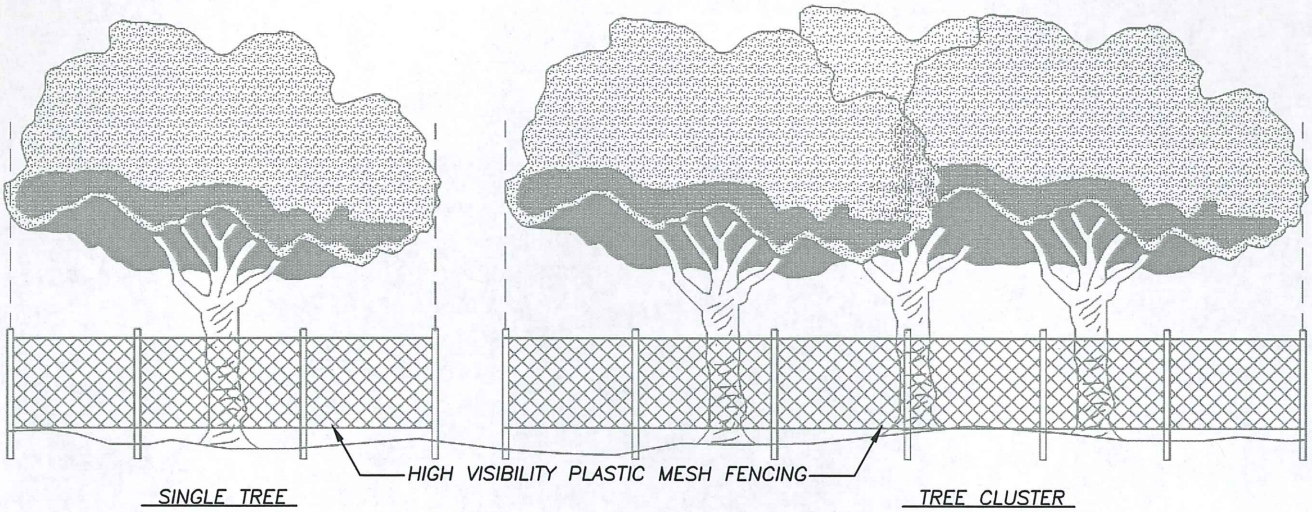

FOR NOTES SEE STD. DETAIL EC-2.2B

SHEET 1 OF 2 N.T.S.

TREE PROTECTION FENCE

STANDARD DETAIL

CITY OF BATTLE GROUND
APPROVED

Scott P. Sawyer 9-16-10

CITY ENGINEER DATE

REVISIONS:	DATE:	DRAWN:	DESIGNED:
1	9/15/10	RMJ	RMJ

EC-2.2A

THE FOLLOWING ACTIVITIES ARE PROHIBITED WITHIN THE LIMITS OF THE CRITICAL ROOT ZONE OF ANY PROTECTED TREE SUBJECT TO THE PROVISIONS OF THE TREE PRESERVATION ORDINANCE. THE FOLLOWING PROCEDURES SHALL BE FOLLOWED ON ALL TYPES OF CONSTRUCTION PROJECTS (INCLUDING RESIDENTIAL, COMMERCIAL, AND MUNICIPAL / PUBLIC DOMAIN PROJECTS).

1. MATERIAL STORAGE: NO STORAGE OR PLACEMENT OF MATERIALS INTENDED FOR USE IN CONSTRUCTION OR WASTE MATERIALS ACCUMULATED DUE TO EXCAVATION OR DEMOLITION SHALL BE PLACED WITHIN THE LIMITS OF THE CRITICAL ROOT ZONE OF ANY PROTECTED TREE.

2. EQUIPMENT CLEANING/LIQUID DISPOSAL: NO EQUIPMENT SHALL BE CLEANED OR OTHER LIQUIDS, INCLUDING, WITHOUT LIMITATION, PAINT, OIL, SOLVENTS, ASPHALT, CONCRETE, MORTAR OR SIMILAR MATERIALS DEPOSITED OR ALLOWED TO FLOW INTO THE CRITICAL ROOT ZONE OF A PROTECTED TREE.

3. TREE ATTACHMENTS: NO SIGNS, WIRES OR OTHER ATTACHMENTS, OTHER THAN THOSE OF A PROTECTIVE NATURE, SHALL BE ATTACHED TO ANY PROTECTED TREE.

4. VEHICULAR TRAFFIC: NO VEHICULAR AND/OR CONSTRUCTION EQUIPMENT TRAFFIC OR PARKING SHALL TAKE PLACE WITHIN THE CRITICAL ROOT ZONE OF ANY PROTECTED TREE OTHER THAN ON EXISTING STREET PAVEMENT. THIS RESTRICTION DOES NOT APPLY TO SINGLE INCIDENT ACCESS WITHIN THE CRITICAL ROOT ZONE FOR PURPOSES OF ESTABLISHING THE BUILDING PAD AND ASSOCIATED LOT GRADING, VEHICULAR TRAFFIC NECESSARY FOR ROUTINE UTILITY MAINTENANCE, EMERGENCY RESTORATION OF UTILITY SERVICE, OR ROUTINE MOWING OPERATIONS.

5. NO HEAVY EQUIPMENT, INCLUDING BUT NOT LIMITED TO TRUCKS, TRACTORS, TRAILERS, BULLDOZERS, BOBCAT TRACTORS, TRENCHERS, COMPRESSORS, AND HOISTS, SHALL BE ALLOWED INSIDE THE DRIP-LINE OF ANY PROTECTED TREE ON ANY CONSTRUCTION SITE WITHOUT PRIOR WRITTEN APPROVAL OF THE ADMINISTRATIVE OFFICIAL.

THE FOLLOWING PROCEDURES SHALL BE FOLLOWED ON ALL TYPES OF CONSTRUCTION PROJECTS (INCLUDING RESIDENTIAL, COMMERCIAL, AND MUNICIPAL / PUBLIC DOMAIN PROJECTS).

1. PROTECTIVE FENCING: PRIOR TO THE ISSUANCE OF ANY BUILDING OR EARTH DISTURBANCE PERMIT, OR COMMENCING CONSTRUCTION, THE OWNER, CONTRACTOR OR SUBCONTRACTOR SHALL CONSTRUCT AND MAINTAIN, FOR EACH PROTECTED TREE ON A CONSTRUCTION SITE, A PROTECTIVE FENCING WHICH ENCIRCLES THE OUTER LIMITS OF THE CRITICAL ROOT ZONE OF THE TREE TO PROTECT IT FROM CONSTRUCTION ACTIVITY OR IN CASES OF HEAVILY WOODED SITES, AS APPROVED BY THE ADMINISTRATIVE OFFICIAL.

2. ALL PROTECTIVE FENCING SHALL BE IN PLACE PRIOR TO COMMENCEMENT OF ANY SITE WORK AND REMAIN IN PLACE UNTIL ALL EXTERIOR CONSTRUCTION ACTIVITY AT THE SITE HAS BEEN COMPLETED.

3. PROTECTIVE FENCING SHALL BE AT LEAST FOUR (4) FEET HIGH, CLEARLY VISIBLE.

4. THE USE OF ORANGE VINYL CONSTRUCTION FENCING OR OTHER SIMILAR FENCING IS GENERALLY PERMITTED ONLY IF THERE IS NO CONSTRUCTION OR VEHICULAR ACTIVITY WITHIN TEN (10) FEET OF THE FENCE. IF CONSTRUCTION ACTIVITY OR VEHICULAR TRAFFIC IS EXPECTED WITHIN TEN (10) FEET OF THE FENCE, THE FENCE SHALL BE CONSTRUCTED OF CHAIN LINK OR OTHER SIMILAR METAL, WOODEN MATERIAL, OR SEMI-RIGID VINYL TAPE FENCING SUPPORTED WITH A TOP SUPPORT WIRE OR EQUIVALENT SUPPORT MATERIAL AFFIXED TO METAL OR WOODEN POSTS, ALL OF WHICH SHALL BE SIX (6) FEET IN HEIGHT.

5. ALL PROTECTIVE FENCING SHALL BE SUPPORTED AT A MAXIMUM OF TEN (10) FOOT INTERVALS BY APPROVED METHODS SUFFICIENT ENOUGH TO KEEP THE FENCE UPRIGHT AND IN PLACE FOR THE DURATION OF THE CONSTRUCTION.

6. THE OWNER SHALL CAUSE THE REQUIRED FENCING TO BE INSTALLED AND MAINTAINED FOR THE DURATION OF THE CONSTRUCTION.

7. FOR PERMITS INVOLVING TRENCHING SUCH AS SEWER SERVICES, IRRIGATION SYSTEMS, OR UNDERGROUND ELECTRICAL WORK, THE APPLICANT SHALL PROVIDE SUFFICIENT PLANS TO PROVIDE PROTECTION OF THE TREES IN THE VICINITY OF THE WORK.

8. ALL OF THE ABOVE CONDITIONS MUST BE ADHERED TO AND INSPECTED BY A CITY INSPECTOR PRIOR TO THE ISSUANCE OF ANY PERMITS.

9. IN SITUATIONS WHERE A PROTECTED TREE REMAINS IN THE IMMEDIATE AREA OF INTENDED CONSTRUCTION AND THE TREE MAY BE IN DANGER OF BEING DAMAGED BY CONSTRUCTION EQUIPMENT OR OTHER ACTIVITY, THE CONTRACTOR OR SUBCONTRACTOR SHALL PROTECT THE TREE WITH 2"X4" LUMBER ENCIRCLED WITH WIRE OR OTHER MEANS THAT DO NOT DAMAGE THE TREE. THE INTENT IS TO PROTECT THE TRUNK OF THE TREE AGAINST INCIDENTAL CONTACT BY LARGE CONSTRUCTION EQUIPMENT.

FOR DETAIL SEE STD. DETAIL EC-2.2A

TREE PROTECTION FENCE

STANDARD DETAIL

THE CITY OF BATTLE GROUND

CITY OF BATTLE GROUND
APPROVED

Scott P. Sawyer 9-16-10

CITY ENGINEER DATE

REVISIONS:	DATE:	DRAWN:	DESIGNED:
1	9/15/10	RMJ	RMJ

EC-2.2B

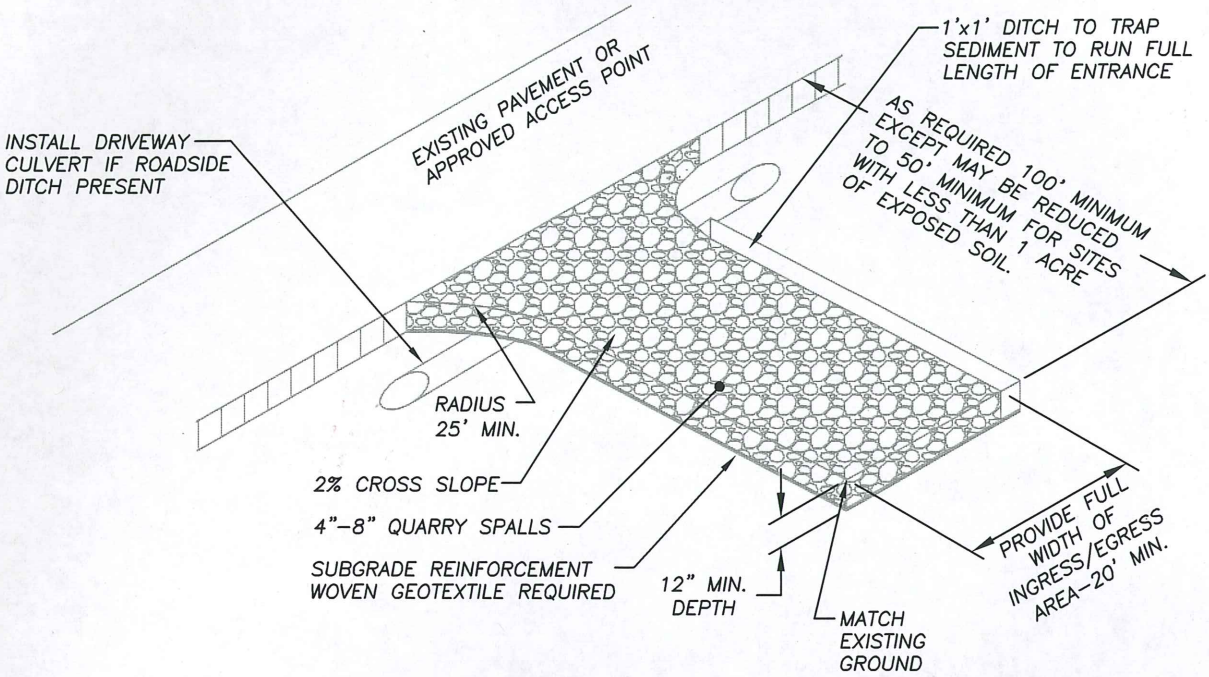

NOTES:

1. INSTALL WOVEN GEOTEXTILE FABRIC TO PREVENT SUB-SOIL PUMPING.
2. VEHICLE WHEELWASH AREA, IF REQUIRED, SHALL BE INSTALLED AND USED TO REMOVE SEDIMENT FROM VEHICLES THAT ARE ABOUT TO ENTER AN ESTABLISHED ROAD. SEE DETAIL EC-3.1.
3. AT TIME OF PRE-CONSTRUCTION CONFERENCE, THE CITY INSPECTOR MAY REQUIRE THE ENTRANCE TO BE PAVED TO THE EDGE OF THE RIGHT-OF-WAY PRIOR TO THE INSTALLATION OF A CONSTRUCTION ENTRANCE TO AVOID DAMAGE TO THE EXISTING ROADWAY.
4. THE CERTIFIED EROSION AND SEDIMENT CONTROL LEAD (CESCL) IS TO ENSURE THAT ALL VEHICLES USE THIS ENTRANCE AND ARE TO BE INSPECTED AND CLEANED OF SOILS BEFORE LEAVING PROJECT, AND THAT THE ENTRANCE IS TO BE KEPT CLEAN AT ALL TIMES.
5. TOP DRESS THE PAD WITH CLEAN 3" MINUS ROCK WHEN THE CONSTRUCTION ENTRANCE BECOMES CLOGGED WITH SEDIMENT.
6. ANY SEDIMENT CARRIED FROM THE SITE ONTO THE STREET SHALL BE CLEANED UP IMMEDIATELY. PRESSURE WASHING NOT ALLOWED. SWEEPING IS THE PREFERRED METHOD.
7. REFER TO BMP C105 IN VOLUME II OF THE WESTERN WASHINGTON MANUAL FOR MORE INFORMATION.

N.T.S.

CONSTRUCTION ENTRANCE

STANDARD DETAIL

THE CITY OF BATTLE GROUND

CITY OF BATTLE GROUND
APPROVED

Scott P. Sawyer 9-16-10
CITY ENGINEER DATE

REVISIONS:	DATE:	DRAWN:	DESIGNED:
1	8/12/98	BSG	GGH
2	8/30/05	ALL	MCH
3	9/15/10	RMJ	RMJ

EC-3.0

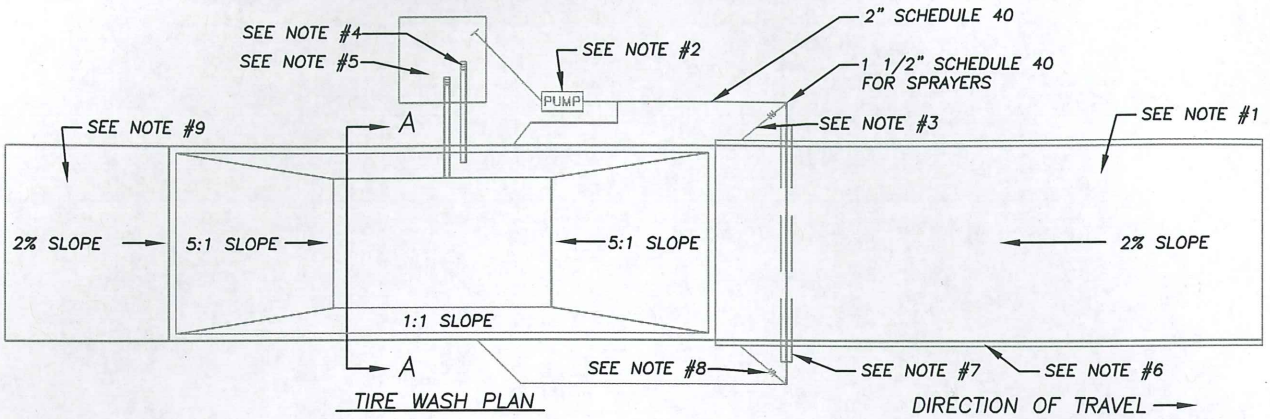

TIRE WASH PLAN

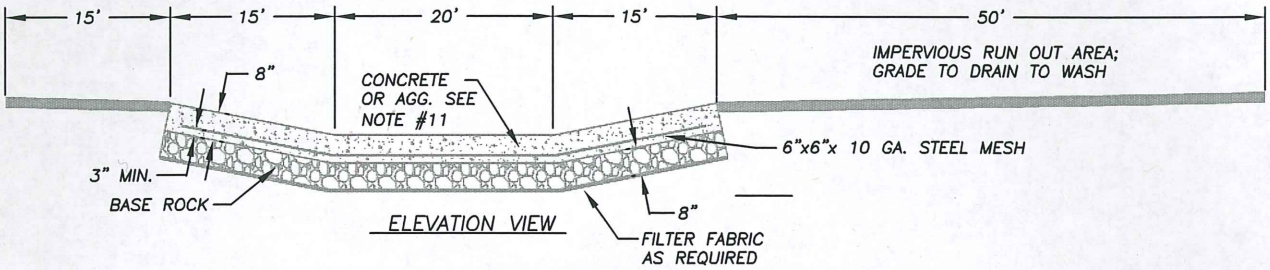

ELEVATION VIEW

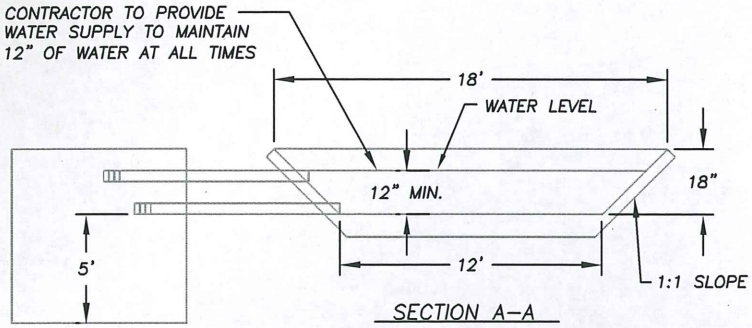

SECTION A–A

NOTES

1. ASPHALT CONSTRUCTION ENTRANCE, 6" OF ATB.
2. 3" TRASH PUMP WITH FLOATS ON SUCTION HOSE.
3. MIDPOINT SPRAY NOZZLES, IF NEEDED.
4. 6" SEWER PIPE WITH BUTTERFLY VALVES. BOTTOM PIPE IS A DRAIN. LOCATE TOP PIPE'S INVERT 1' ABOVE BOTTOM OF TIRE WASH.
5. 8'x 8' SUMP WITH 5' OF CATCHMENT. BUILD WITH ABILITY TO CLEAN WITH BACKHOE.
6. ASPHALT CURB ON THE LOW ROAD SIDE TO DIRECT WATER BACK TO POND.
7. 6" SLEEVE UNDER ROAD.
8. BALL VALVES.
9. ASPHALT CONSTRUCTION ENTRANCE, 6" OF ATB.
10. ATB APRON TO PROTECT FROM SPLASHING WATER.
11. CONTRACTOR TO REMOVE ACCUMULATED SEDIMENT FROM TIRE WASH; MAY BE PIPED TO AN APPROVED SEDIMENT TRAP.
11. USE GEOTEXTILE FABRIC WITH AGGREGATE FOR A TEMPORARY WHEEL WASH. AGGREGATE SIZE PER WSDOT 9–13.6.
12. KEEP THE WATER LEVEL FROM 12"–14" DEEP.
13. WHEEL WASH SHALL START EACH DAY WITH FRESH WATER.
14. WASH WATER TO BE CHANGED AT LEAST ONCE A DAY.
15. WASH WATER TO BE DISCHARGED TO A SEPARATE ON–SITE TREATMENT SYSTEM.
16. REFER TO BMP C106 IN VOLUME II OF THE WESTERN WASHINGTON MANUAL FOR MORE INFORMATION.

N.T.S.

WHEEL WASH

STANDARD DETAIL

THE CITY OF BATTLE GROUND

CITY OF BATTLE GROUND
APPROVED

Scott P. Sawyer 9-16-10
CITY ENGINEER DATE

REVISIONS:	DATE:	DRAWN:	DESIGNED:
1	9/15/10	RMJ	RMJ

EC–3.1

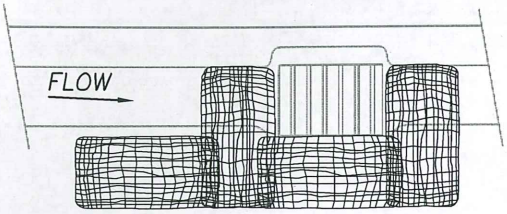

CATCH BASIN AT CURB LINE

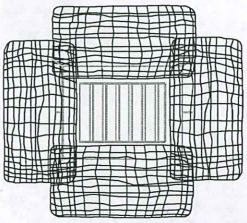

AREA DRAIN OR CATCH BASIN

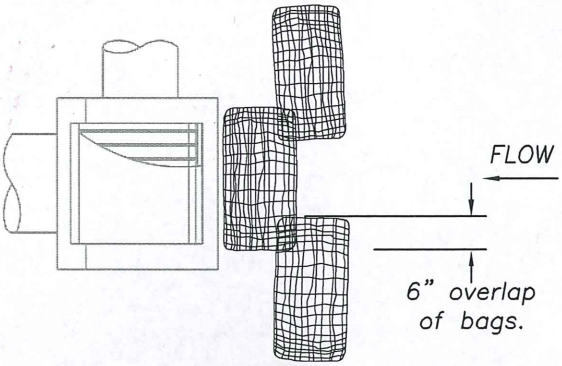

DITCH INLET

NOTES:

1. BIO–FILTER BAGS NOT TO BE USED WITHIN CITY OF BATTLE GROUND ROW UNLESS APPROVED BY CITY ENGINEER. IF APPROVED, BIO–FILTER BAGS SHALL BE USED IN CONJUNCTION WITH CATCH BASIN INSERT (EC–4.1), OR SEDIMENT DAM (EC–4.2).
2. ADDITIONAL MEASURES MUST BE CONSIDERED DEPENDING ON SOIL TYPE.
3. BIO–FILTER BAGS SHOULD BE STAKED WHERE APPLICABLE USING (2) 1"x2" WOODEN STAKES OR APPROVED EQUAL PER BAG.

N.T.S.

INLET PROTECTION (BIO–FILTER BAG)

STANDARD DETAIL

THE CITY OF BATTLE GROUND

CITY OF BATTLE GROUND APPROVED

Scott P. Sawyer 9-16-10

CITY ENGINEER DATE

REVISIONS:	DATE:	DRAWN:	DESIGNED:
1	01/08	CMS	MCH
2	9/15/10	RMJ	RMJ

EC–4.0

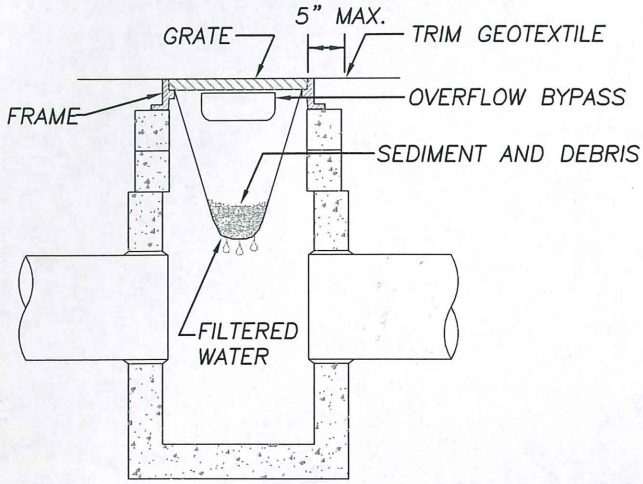

CROSS SECTION

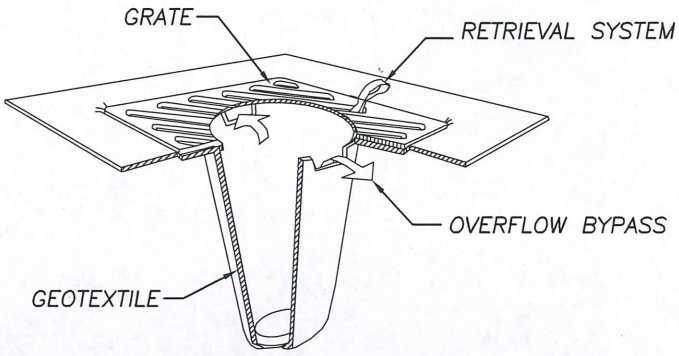

ISOMETRIC VIEW

NOTES:

1. THE INLET SEDIMENT CONTROL DEVICE SHALL BE OF HIGH FLOW DESIGN (200 GAL/MIN/SQ FT), AS PER THE MANUFACTURER'S SPECS.
2. SUBSTITUTION OF A SHEET OF FILTER FABRIC PLACED OVER THE OPENING OF THE INLET IS NOT APPROVED.
3. THE FILTER SHALL BE REPLACED OR CLEANED WHEN THE INSERT BECOMES HALF FULL.
4. FOR SEDIMENT DAM REFER TO STANDARD DETAIL EC-4.2.
5. REFER TO BMP C220 IN VOLUME II OF THE WESTERN WASHINGTON MANUAL FOR MORE INFORMATION.

N.T.S.

INLET PROTECTION (CATCH BASIN INSERT)

STANDARD DETAIL

THE CITY OF BATTLE GROUND

CITY OF BATTLE GROUND
APPROVED

Scott P. Sawyer 9-16-10

CITY ENGINEER DATE

REVISIONS:	DATE:	DRAWN:	DESIGNED:
1	9/15/10	RMJ	RMJ

EC-4.1

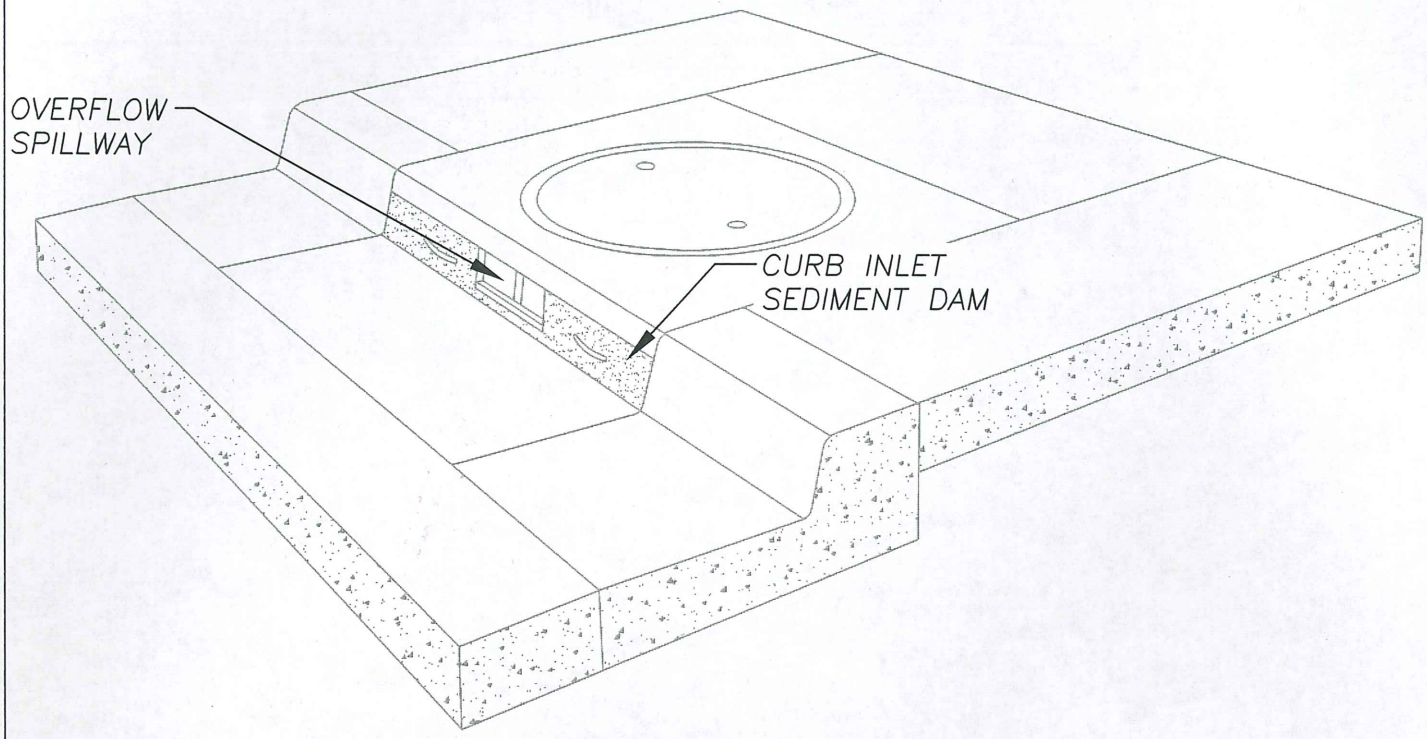

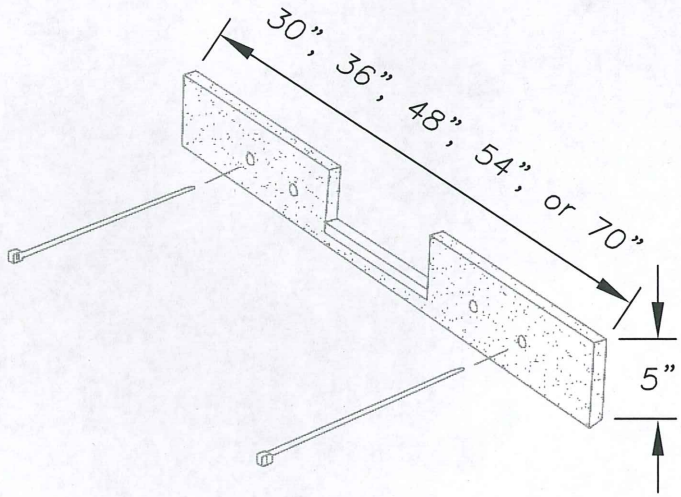

NOTES:

1. SEDIMENT DAM SHALL BE MADE FROM 100% NON-WOVEN POLYFIBER

N.T.S.

INLET PROTECTION (SEDIMENT DAM)					STANDARD DETAIL
THE CITY OF BATTLE GROUND	CITY OF BATTLE GROUND APPROVED	REVISIONS:	DATE:	DRAWN:	DESIGNED:
		1	9/15/10	RMJ	RMJ
	Scott P. Sawyer 9-16-10				EC-4.2
	CITY ENGINEER DATE				

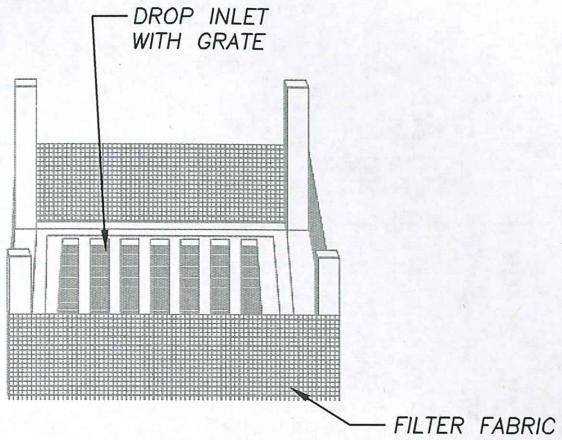

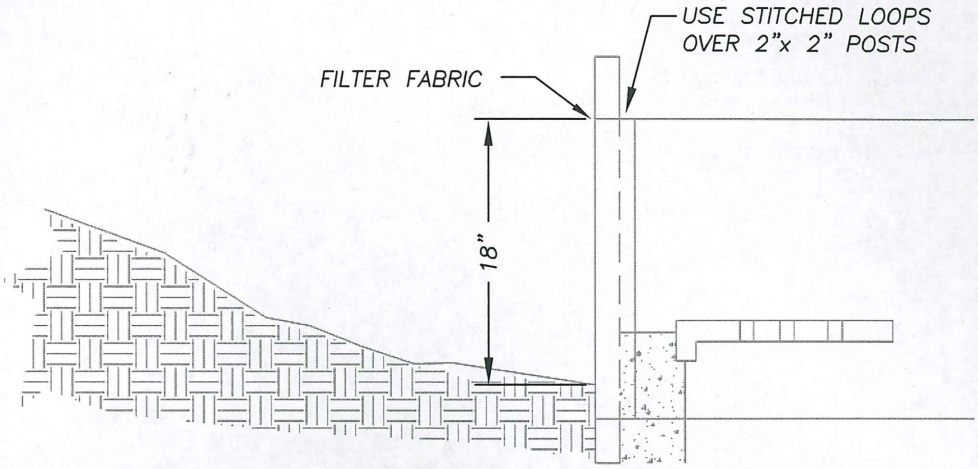

PROFILE

NOTES:

1. BURY BOTTOM OF FILTER FABRIC 6" VERTICALLY BELOW FINISHED GRADE.
2. COMPACT BOTH SIDES OF FILTER FABRIC TRENCH.
3. SEDIMENT DEPOSITS MUST BE REMOVED WHEN DEPOSITS REACH APPROXIMATELY ONE-HALF THE HEIGHT OF THE BARRIER.
4. DAMAGED SILT FENCE SHALL BE REMOVED AND REPLACED PROMPTLY.
5. STAPLING OF SILT FENCE ONTO WOODEN POSTS IS NOT ALLOWED.
6. REFER TO BMP C220 IN VOLUME II OF THE WESTERN WASHINGTON MANUAL FOR MORE INFORMATION.

N.T.S.

INLET PROTECTION (SILT FENCE)

STANDARD DETAIL

THE CITY OF BATTLE GROUND

CITY OF BATTLE GROUND
APPROVED

Scott P. Sanya 9-16-10

CITY ENGINEER DATE

REVISIONS:	DATE:	DRAWN:	DESIGNED:
1	8/12/98	BSG	GGH
2	8/30/05	ALL	MCH
3	9/15/10	RMJ	RMJ

EC-4.3

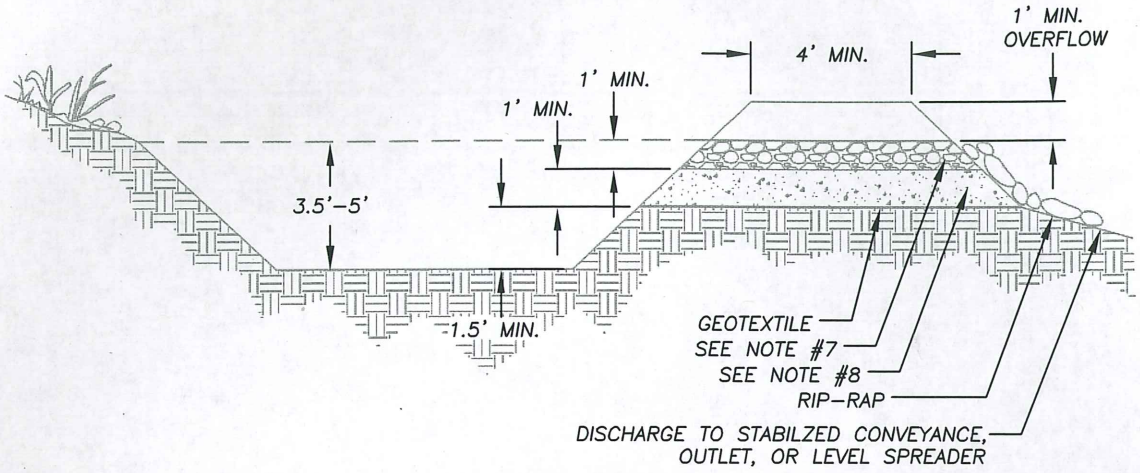

CROSS SECTION

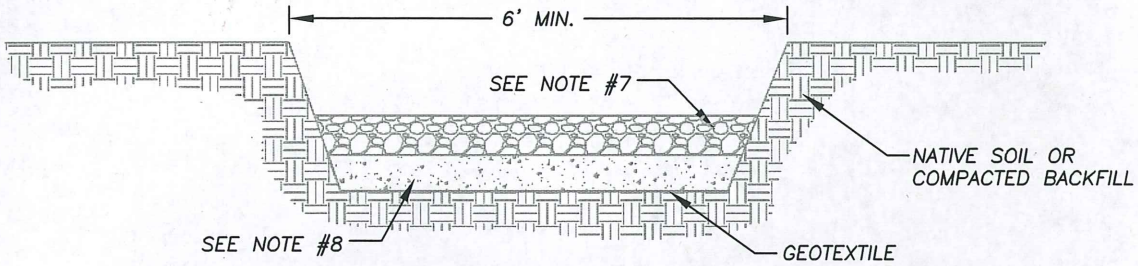

SEDIMENT TRAP OUTLET

NOTES:

1. THE SEDIMENT TRAP MAY BE FORMED COMPLETELY BY EXCAVATION OR BY CONSTRUCTION OF A COMPACTED EMBANKMENT, AND IS TO BE CONSTRUCTED PRIOR TO ANY UPSLOPE CLEARING AND GRADING.
2. TRAP IS TO BE LOCATED IN A LOW AREA WHERE THE TRAP WILL INTERCEPT ALL OR MOST OF THE RUNOFF FROM THE DISTURBED AREA. MUST BE ACCESSIBLE FOR MAINTENANCE.
3. PROVIDE DIVERSION DIKES AND DITCHES, AS NEEDED TO COLLECT AND DIVERT WATER SEDIMENT LADEN FLOWS TO TRAPS AND PONDS.
4. SEDIMENT TRAPS SHALL BE LIMITED TO A TRIBUTARY AREA OF LESS THAN 3 ACRES.
5. SEDIMENT TRAPS AND PONDS ARE TO HAVE A LEVEL BOTTOM, 3:1 OR FLATTER SIDE SLOPES, AND A L:W RATIO OF 3.
6. REMOVE SEDIMENT FROM THE TRAP BEFORE IT REACHES ONE FOOT IN DEPTH AND REPAIR ANY DAMAGE TO THE TRAP AND THE EMBANKMENT OR THE SLOPES.
7. 1' DEPTH 2"-4" ROCK.
8. 1' DEPTH 3/4"-1 1/2" WASHED GRAVEL.
9. REFER TO BMP C240 IN VOLUME II OF THE WESTERN WASHINGTON MANUAL FOR MORE INFORMATION.

N.T.S.

SEDIMENT TRAP					STANDARD DETAIL
THE CITY OF BATTLE GROUND	CITY OF BATTLE GROUND APPROVED	REVISIONS:	DATE:	DRAWN:	DESIGNED:	EC-5.0
		1	8/12/98	BSH	GGH	
		2	8/30/05	ALL	MCH	
		3	9/15/10	RMJ	RMJ	
	Scott P. Sawyer 9-16-10					
	CITY ENGINEER DATE					

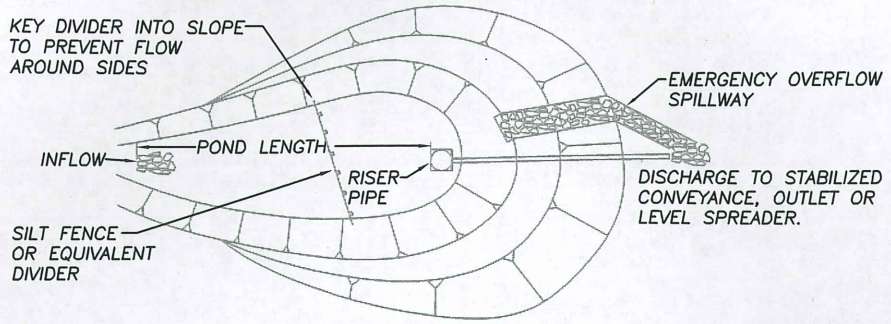

PLAN VIEW

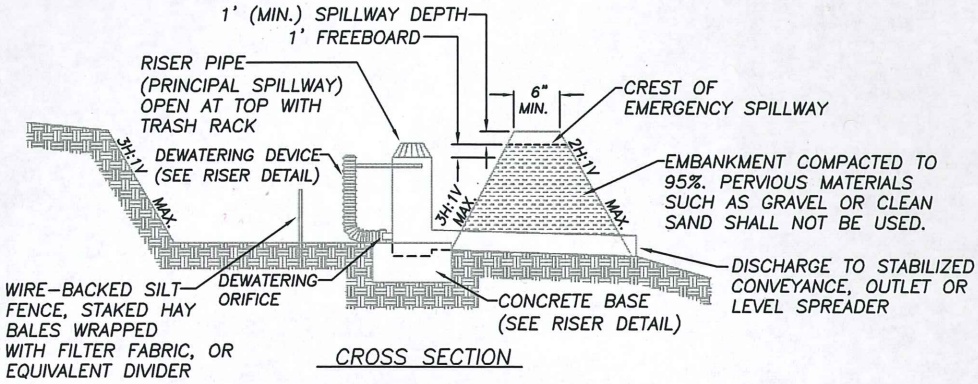

CROSS SECTION

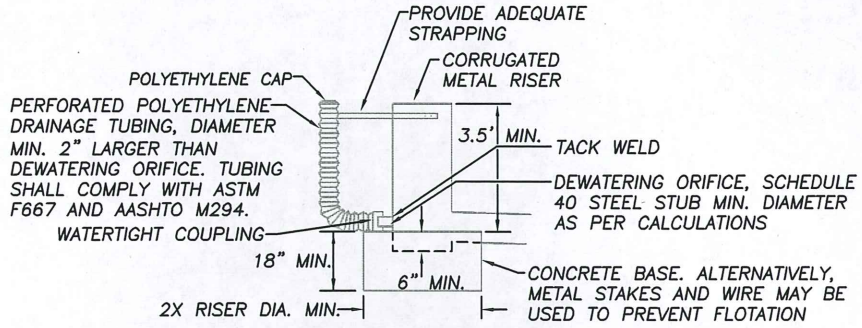

RISER DETAIL

NOTES:

1. THE POND LENGTH SHALL BE 3 TO 6 TIMES THE MAXIMUM POND WIDTH.
2. POND MAY BE FORMED BY BERM OR BY PARTIAL OR COMPLETE EXCAVATION.
3. STRUCTURES HAVING A MAXIMUM STORAGE CAPACITY AT THE TOP OF THE DAM OF 10 ACRE-FT (435,600 FT^3) OR MORE ARE SUBJECT TO THE WASHINGTON DAM SAFETY REGULATIONS (WAC 173-175).
4. GRADE BOTTOM OF BASIN AS LEVEL AS POSSIBLE.
5. SPILLWAY SHALL BE LINED WITH 2"-4" ROCKS.
6. ALL INLETS AND OUTLETS SHALL BE PROTECTED WITH RIPRAP.
7. REMOVE SEDIMENT BEFORE 1-FOOT ACCUMULATES.
8. REFER TO BMP C241 IN VOLUME II OF THE WESTERN WASHINGTON MANUAL FOR MORE INFORMATION.

N.T.S.

TEMPORARY SEDIMENT POND

STANDARD DETAIL

THE CITY OF BATTLE GROUND

CITY OF BATTLE GROUND
APPROVED

Scott P. Sawyer 9-16-10

CITY ENGINEER DATE

REVISIONS:	DATE:	DRAWN:	DESIGNED:
1	01/08	CMS	MCH
2	9/15/10	RMJ	RMJ

EC-5.1

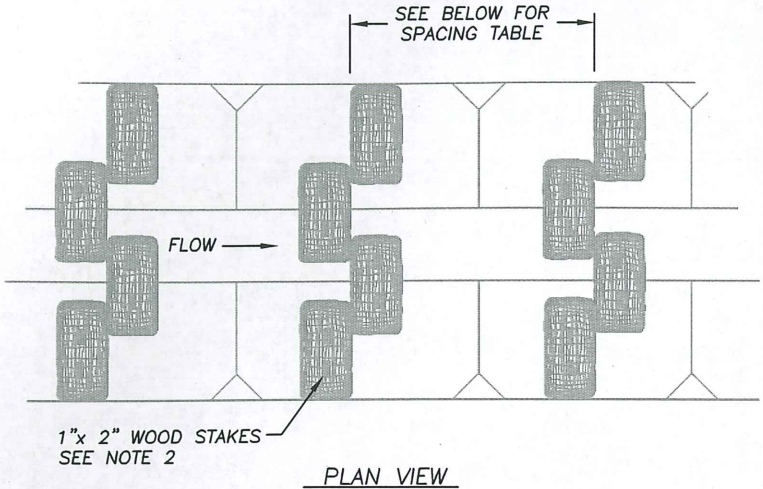

PLAN VIEW

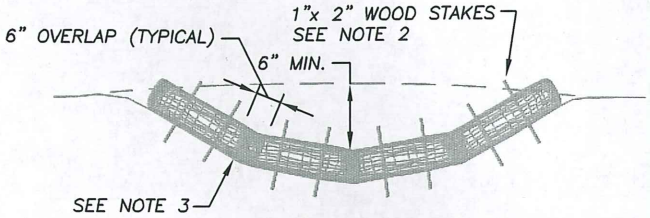

PROFILE

BIO-BAGS CHECK DAM

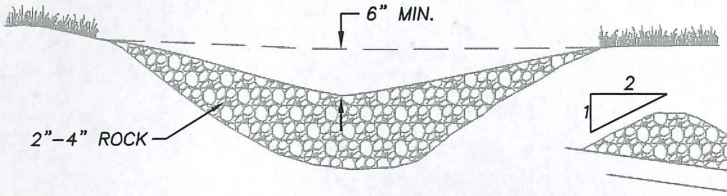

CROSS SECTION VIEW

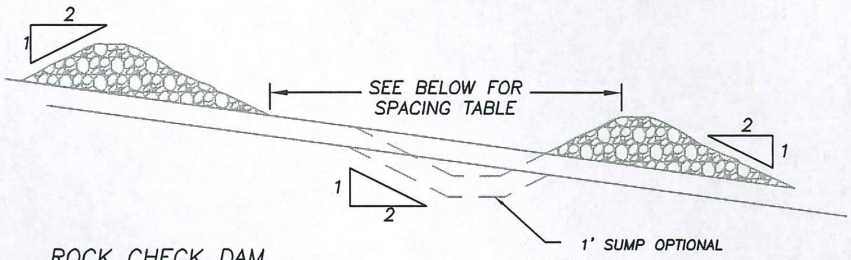

ROCK CHECK DAM

PROFILE

CHECK DAM NOTES:

1. CHECK DAMS SHALL BE USED IN TEMPORARY OR PERMANENT CHANNELS THAT DRAIN 10 ACRES OR LESS, ARE NOT YET VEGETATED, AND WHEN INSTALLING CHANNEL LINING IS NOT FEASIBLE.
2. STAKING OF BAGS REQUIRED USING (2) 1"X2" WOOD STAKES OR APPROVED EQUAL PER BAG.
3. SURFACE MUST BE SMOOTH BEFORE APPLICATION.
4. USE TYPICAL ROCK SIZE OF 2"-4". PLACE ROCK BY HAND OR BY MECHANICAL MEANS RATHER THAN DUMPING THE ROCK. BRIDGE ENTIRE DITCH OR SWALE WIDTH AND ENSURE THE CENTER OF THE DAM IS 6" LOWER THAN THE OUTER ENDS. FOR HIGHER VELOCITY FLOWS: ±5 FPS USE 6"-12" RIPRAP, AND HAND PLACE LARGER ROCK ON UPSTREAM SIDE OF DAM.
5. REMOVE CHECK DAMS FROM GRASS-LINED DITCHES AND SWALES ONCE THE GRASS IS ESTABLISHED. SEED, MULCH OR MAT THE AREA WHERE THE CHECK DAMS WERE, IMMEDIATELY FOLLOWING REMOVAL.
6. REFER TO BMP C207 IN VOLUME II OF THE WESTERN WASHINGTON MANUAL FOR MORE INFORMATION.

SPACING TABLE FOR CHECK DAMS:

DITCH GRADE	MINIMUM DEPTH		
	6 INCH	12 INCH	18 INCH
6%	**	L=16 FT.	L=26 FT.
5%	**	L=20 FT.	L=30 FT.
4%	**	L=26 FT.	L=40 FT.
3%	L=15 FT.	L=33 FT.	L=50 FT.
2%	L=25 FT.	L=50 FT.	L=80 FT.

**NOT ALLOWED

N.T.S.

CHECK DAM

STANDARD DETAIL

THE CITY OF BATTLE GROUND

CITY OF BATTLE GROUND
APPROVED

Scott P. Sawyer 9-16-10

CITY ENGINEER DATE

REVISIONS:	DATE:	DRAWN:	DESIGNED:
1	8/12/98	BSG	GGH
2	8/30/05	ALL	MCH
3	9/15/10	RMJ	RMJ

EC-6.0

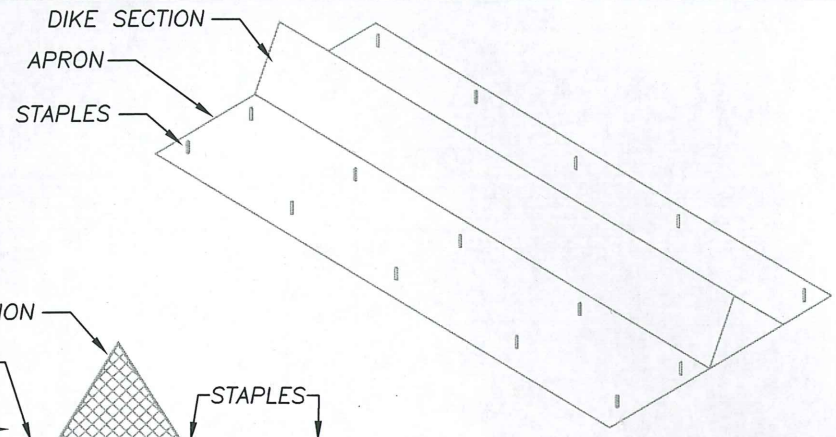

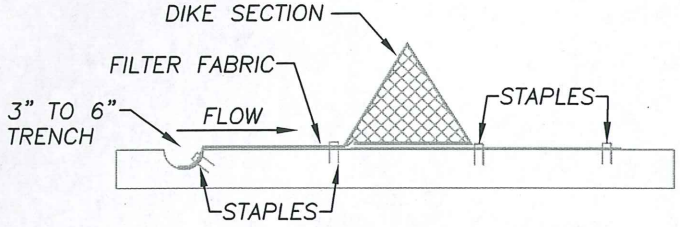

SECTION

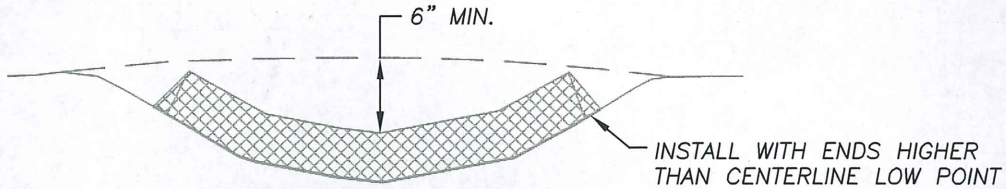

PROFILE

NOTES:

1. TO BE INSTALLED PER MANUFACTURER'S SPECIFICATION. SEE WSDOT SPECIFICATION 8-01.3(6)A & 9-14.5(4).
2. CAN REPLACE SILT FENCE WHEN USED ON IMPERVIOUS SURFACES.
3. IF USED ON IMPERVIOUS SURFACES, ADHESIVE SHALL BE USED IN LIEU OF STAPLES. ADHESIVE SHALL BE APPLIED UNDER FULL LENGTH OF BARRIER AND APRON.
4. STAPLES SHALL BE 200-300 MM IN LENGTH AND MADE OF 11 GA WIRE.
5. PRODUCT SHALL BE MADE FROM URETHANE FOAM WITH A GEOSYNTHETIC FABRIC COVER.
6. REFER TO BMP C208 IN VOLUME II OF THE WESTERN WASHINGTON MANUAL FOR MORE INFORMATION.

SPACING TABLE FOR CHECK DAMS:

DITCH GRADE	MINIMUM DEPTH		
	6 INCH	12 INCH	18 INCH
6%	**	L=16 FT.	L=26 FT.
5%	**	L=20 FT.	L=30 FT.
4%	**	L=26 FT.	L=40 FT.
3%	L=15 FT.	L=33 FT.	L=50 FT.
2%	L=25 FT.	L=50 FT.	L=80 FT.

**NOT ALLOWED

N.T.S.

CHECK DAM (GEOTEXTILE-ENCASED)

STANDARD DETAIL

CITY OF BATTLE GROUND APPROVED

Scott P. Sawyer 9-16-10

CITY ENGINEER DATE

REVISIONS:	DATE:	DRAWN:	DESIGNED:
1	8/12/98	BSG	GGH
2	8/30/05	ALL	MCH
3	9/15/10	RMJ	RMJ

EC-6.1

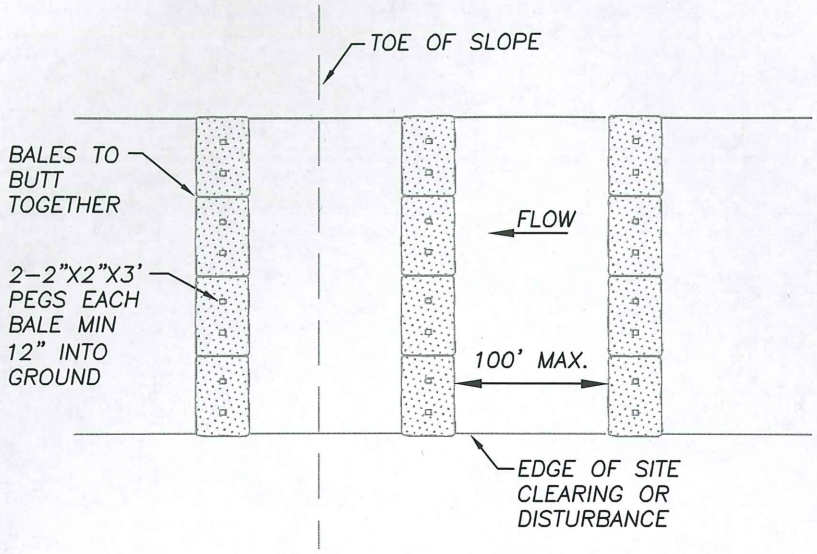

PLAN VIEW

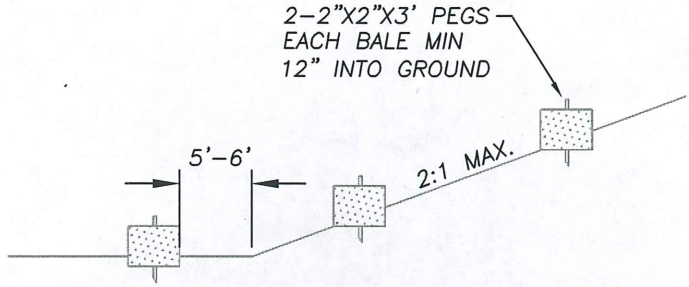

PROFILE

NOTES:

1. BALES SHALL BE EITHER WIRE-BOUND OR STRING TIED.
2. BALES SHALL NOT BE USED ON ROCK OR HARD SURFACES.
3. BALES SHALL NOT BE CONSTRUCTED IN STREAMS, CHANNELS, OR DITCHES.
4. EMBED BALES 4 TO 6 INCHES.
5. SEDIMENT DEPOSITS MUST BE REMOVED WHEN DEPOSITS REACH APPROXIMATELY ONE-HALF THE HEIGHT OF THE BARRIER.
6. REFER TO BMP C230 IN VOLUME II OF THE WESTERN WASHINGTON MANUAL FOR MORE INFORMATION.

N.T.S.

SEDIMENT BARRIER (STRAW BALE)

STANDARD DETAIL

THE CITY OF BATTLE GROUND

CITY OF BATTLE GROUND
APPROVED

Scott R. Sawyer 9-16-10

CITY ENGINEER DATE

REVISIONS:	DATE:	DRAWN:	DESIGNED:
1	8/12/98	BSG	GGH
2	8/30/05	ALL	MCH
3	9/15/10	RMJ	RMJ

EC-6.2

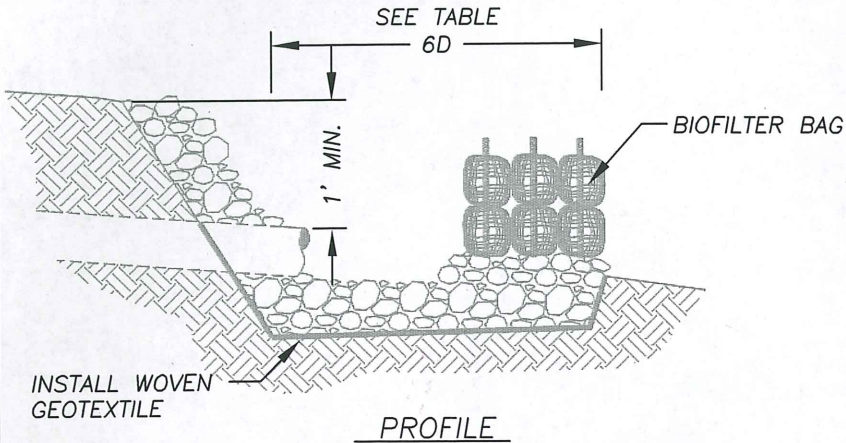

PROFILE

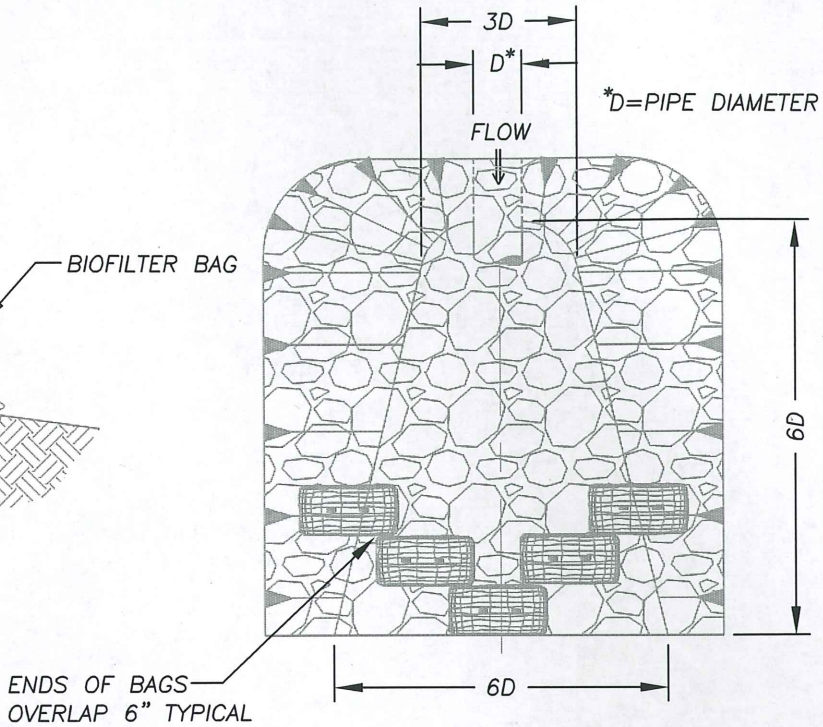

PLAN VIEW

NOTES:

1. BIO-FILTERS BAGS ONLY REQUIRED WHEN DISCHARGING SEDIMENT LADEN WATER. STAKING OF BAGS REFER TO EC-4.0.
2. RIP-RAP SIZING GOVERNED BY THE SIDE SLOPES ON THE OUTLET CHANNEL, ASSUMED TO BE 3:1.
3. PLACE WOVEN GEOTEXTILE ALONG BOTTOM AND SIDE SLOPES TO CROWN OF PIPE, AND INSTALL ROCK TO 1' ABOVE PIPE CROWN ALONG BOTH SIDES OF CHANNEL.
4. RIP-RAP SHALL BE IN ACCORDANCE WITH WSDOT 9-13.1 OF THE WSDOT STANDARD SPECIFICATIONS.
5. IF THERE IS SCOURING AT THE OUTLET, PROTECT THE ERODED AREA BY INCREASING THE SIZE OF THE RIP RAP AREA.
6. REFER TO BMP C209 IN VOLUME II OF THE WESTERN WASHINGTON MANUAL FOR MORE INFORMATION.

N.T.S.

TEMPORARY OUTLET PROTECTION (RIP-RAP)					STANDARD DETAIL
THE CITY OF BATTLE GROUND	CITY OF BATTLE GROUND APPROVED	REVISIONS:	DATE:	DRAWN:	DESIGNED:
		1	9/15/10	RMJ	RMJ
	Scott P. Sawyer 9-16-10				EC-6.3
	CITY ENGINEER DATE				

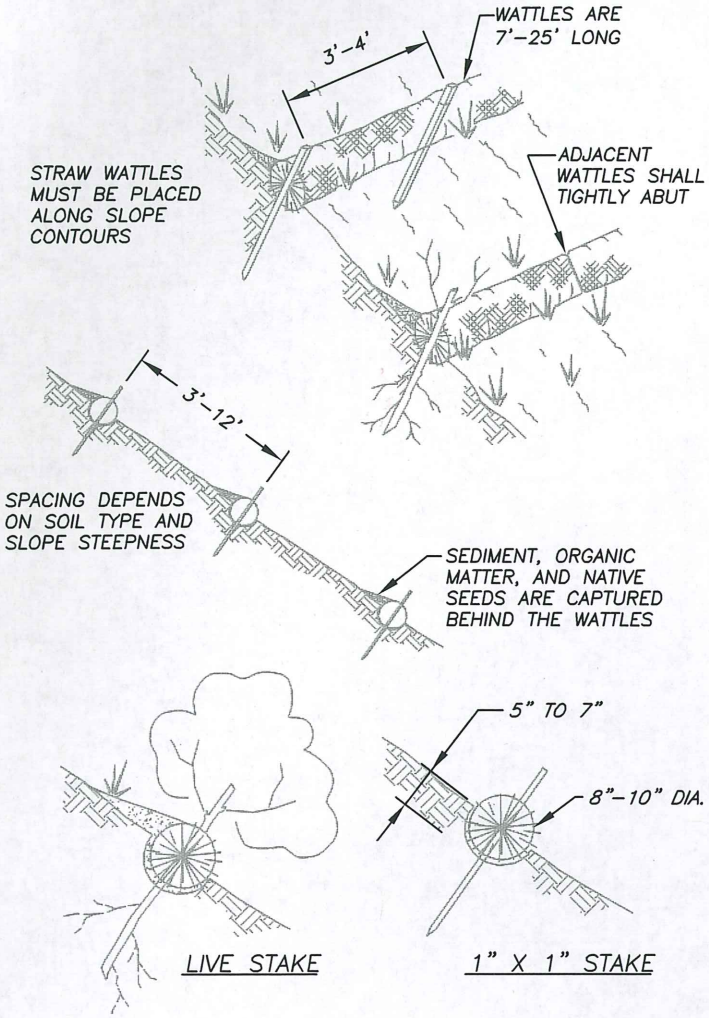

NOTES:

1. PREPARE THE SLOPE BEFORE THE WATTLING PROCEDURE IS STARTED.
2. SHALLOW GULLIES SHOULD BE SMOOTHED AS WORK PROGRESSES.
3. DIG SMALL TRENCHES ACROSS THE SLOPE ON CONTOUR, TO PLACE WATTLES IN. THE TRENCH SHOULD BE DEEP ENOUGH TO ACCOMMODATE HALF THE THICKNESS. THE TRENCH SHOULD BE DEEP ENOUGH TO BURY THE WATTLE 2/3 OF ITS THICKNESS.
4. START BUILDING TRENCHES AND INSTALL WATTLES FROM THE BOTTOM OF THE SLOPE AND WORK UP.
5. CONSTRUCT TRENCHES AT CONTOUR INTERVALS OF 3-12 FEET APART DEPENDING ON STEEPNESS OF SLOPE. THE STEEPER THE SLOPE, THE CLOSER TOGETHER THE TRENCHES.

   1:1=10' 3:1=30'
   2:1=20' 4:1=40'
6. LAY THE WATTLE ALONG THE TRENCHES FITTING IT SNUGLY AGAINST THE SOIL. MAKE SURE NO GAPS EXIST BETWEEN THE SOIL AND THE STRAW WATTLE.
7. USE A STRAIGHT BAR TO DRIVE HOLES THROUGH THE WATTLE AND INTO THE SOIL FOR THE WILLOW OR WOODEN STAKES.
8. DRIVE THE STAKE THROUGH PREPARED HOLE INTO SOIL. LEAVE ONLY 1 OR 2 INCHES OF STAKE EXPOSED ABOVE WATTLE.
9. INSTALL STAKES AT LEAST EVERY 4 FEET APART THROUGH THE WATTLE. ADDITIONAL STAKES MAY BE DRIVEN ON THE DOWNSLOPE SIDE OF THE TRENCHES ON HIGHLY EROSIVE OR VERY STEEP SLOPES.
10. RESEED OR REPLANT VEGETATION IF NECESSARY UNTIL THE SLOPE IS STABILIZED.
11. RUNOFF SHALL NOT RUN UNDER OR AROUND WATTLE.
12. WATTLES ARE EFFECTIVE FOR ONE OR TWO SEASONS.
13. REFER TO BMP C235 IN VOLUME II OF THE WESTERN WASHINGTON MANUAL FOR MORE INFORMATION.

N.T.S.

WATTLE					STANDARD DETAIL
THE CITY OF BATTLE GROUND	CITY OF BATTLE GROUND APPROVED	REVISIONS:	DATE:	DRAWN:	DESIGNED:
		1	9/15/10	RMJ	RMJ
	Scott P. Sawyer 9-16-10				EC-6.4
	CITY ENGINEER DATE				

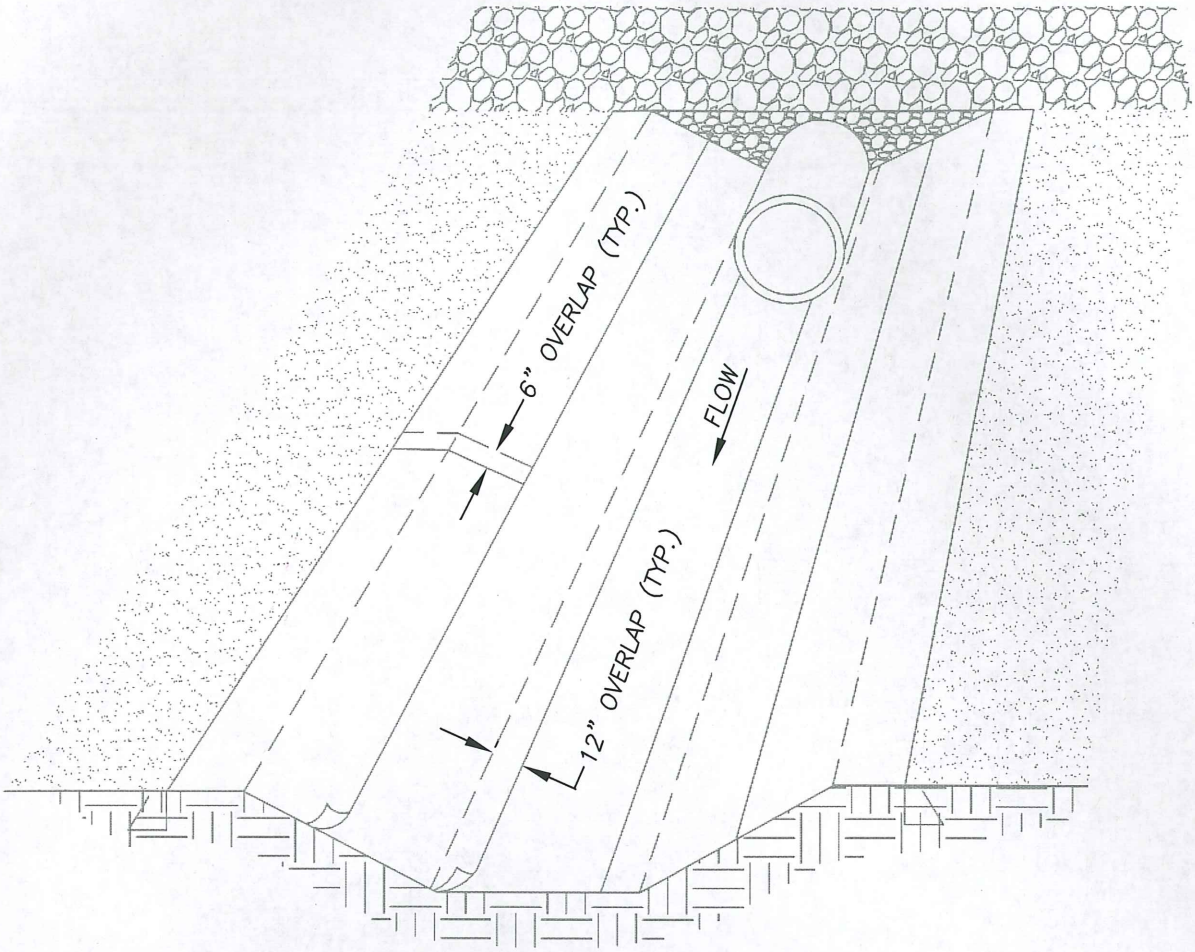

NOTES:

1. INFORMATION PROVIDED IS MINIMUM REQUIREMENTS. MANUFACTURERS REQUIREMENTS SHALL BE USED IF MORE STRINGENT.
2. INSTALL MAT PARALLEL IN CENTER OF CHANNEL IN THE DIRECTION OF FLOW. FOR CULVERT OUTFALLS, PLACE MAT UNDER CULVERT OR RIP RAP A MIN. OF 12".
3. IN CHANNEL BOTTOM, OVERLAP LENGTH ENDS A MINIMUM OF 12".
4. REFER TO STD. DETAIL EC-1.1 FOR MATTING NOTES.
5. REFER TO BMP C122 IN VOLUME II OF THE WESTERN WASHINGTON MANUAL FOR MORE INFORMATION.

N.T.S.

MATTING INSTALLATION (CHANNEL)					STANDARD DETAIL
THE CITY OF BATTLE GROUND	CITY OF BATTLE GROUND APPROVED	REVISIONS:	DATE:	DRAWN:	DESIGNED:
		1	9/15/10	RMJ	RMJ
	Scott P. Sawyer 9-16-10				EC-7.0
	CITY ENGINEER DATE				

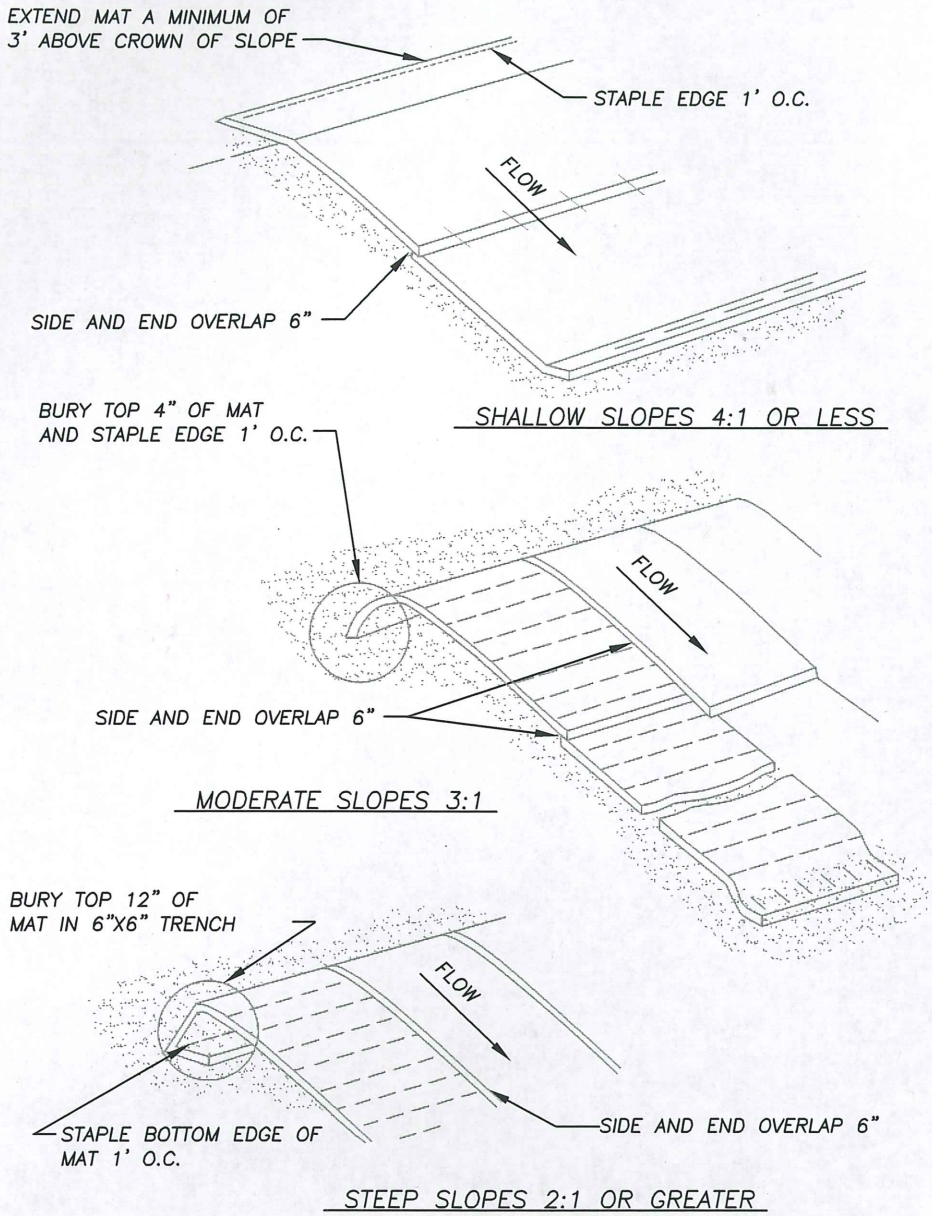

NOTES:

1. INFORMATION PROVIDED IS MINIMUM REQUIREMENTS. MANUFACTURERS REQUIREMENTS SHALL BE USED IF MORE STRINGENT.
2. REFER TO STD. DETAIL EC-1.1 FOR MATTING NOTES.
3. REFER TO BMP C122 IN VOLUME II OF THE WESTERN WASHINGTON MANUAL FOR MORE INFORMATION.

N.T.S.

MATTING INSTALLATION (SLOPE)

STANDARD DETAIL

THE CITY OF BATTLE GROUND

CITY OF BATTLE GROUND
APPROVED

Scott P. Sawyer 9-16-10

CITY ENGINEER DATE

REVISIONS:	DATE:	DRAWN:	DESIGNED:
1	9/15/10	RMJ	RMJ

EC-7.1

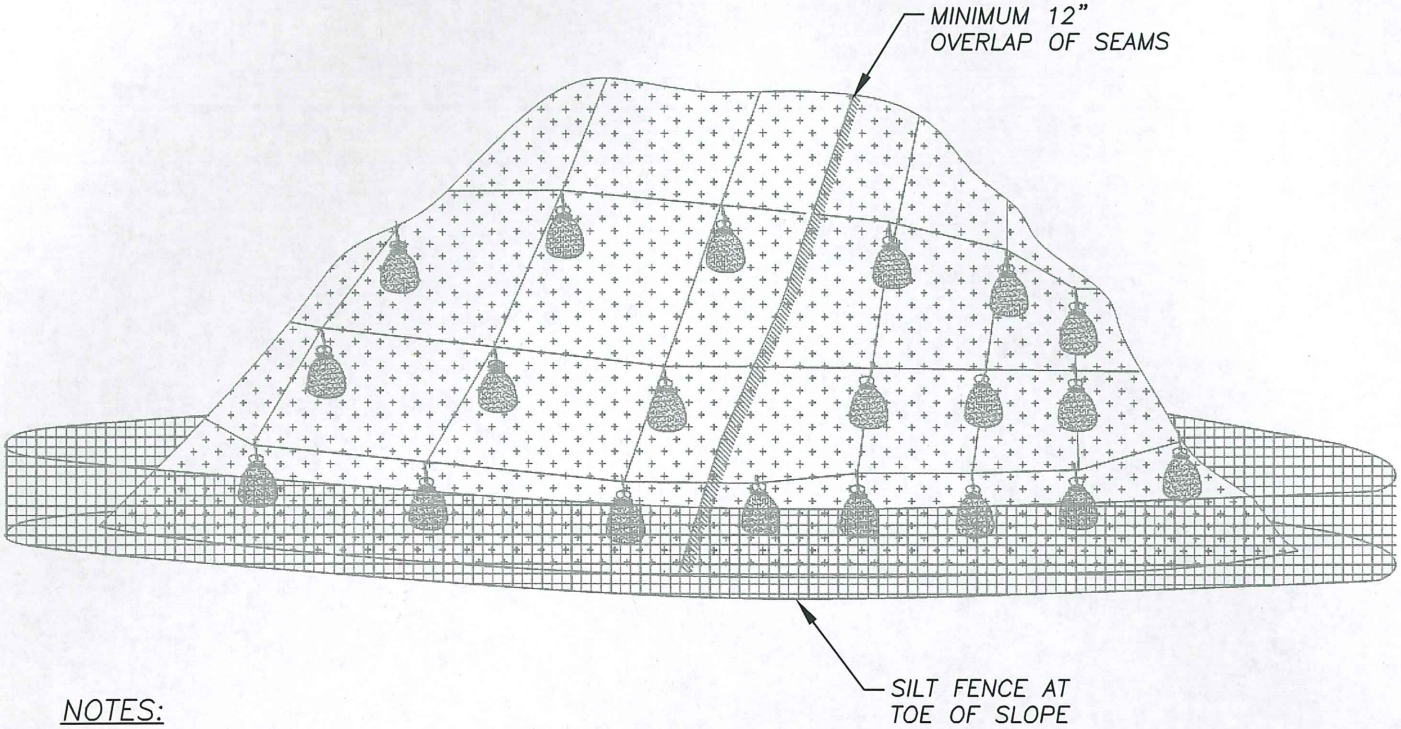

NOTES:

1. PLASTIC SHEETING SHALL BE A MINIMUM OF 0.06 MILLIMETERS THICK.
2. PLASTIC SHEETING MAY BE USED ON DISTURBED AREA THAT REQUIRE COVER MEASURES FOR LESS THAN 30 DAYS.
3. DO NOT USE PLASTIC COVERING UPSLOPE OF AREAS SUCH AS STEEP AND/OR UNSTABLE SLOPES THAT MIGHT BE ADVERSELY AFFECTED BY CONCENTRATED RUNOFF.
4. WHEN POSSIBLE, INSTALL AN INTERCEPTOR DIKE AT THE TOP OF THE PLASTIC TO DIVERT FLOWS AWAY FROM THE PLASTIC WHEN USED ON SIDE SLOPES.
5. TOE-IN THE TOP OF THE SHEETING IN A 6"x6" TRENCH BACKFILLED WITH COMPACTED NATIVE MATERIAL.
6. INSTALL A GRAVEL BERM, RIPRAP, OR OTHER SUITABLE PROTECTION AT THE TOP OF THE SLOPE IN ORDER TO DISSIPATE RUNOFF VELOCITY.
7. ANCHOR THE PLASTIC USING SANDBAGS OR OTHER SUITABLE TETHERED ANCHOR SYSTEM SPACED ON A 10' GRID SPACING IN ALL DIRECTIONS.
8. OVERLAP SEAMS 12" (MIN.), TAPE, ROLL AND STAKE THE SEAMS AND THEN WEIGH DOWN THE ENTIRE LENGTH.
9. REPLACE TORN SHEETS AND REPAIR OPEN SEAMS. COMPLETELY REMOVE AND REPLACE PLASTIC WHEN IT BEGINS TO DETERIORATE.
10. REFER TO BMP C123 IN VOLUME II OF THE WESTERN WASHINGTON MANUAL FOR MORE INFORMATION.

N.T.S.

PLASTIC SHEETING

STANDARD DETAIL

THE CITY OF BATTLE GROUND

CITY OF BATTLE GROUND
APPROVED

Scott P. Sawyer 9-16-10

CITY ENGINEER DATE

REVISIONS:	DATE:	DRAWN:	DESIGNED:
1	9/15/10	RMJ	RMJ

EC-7.2

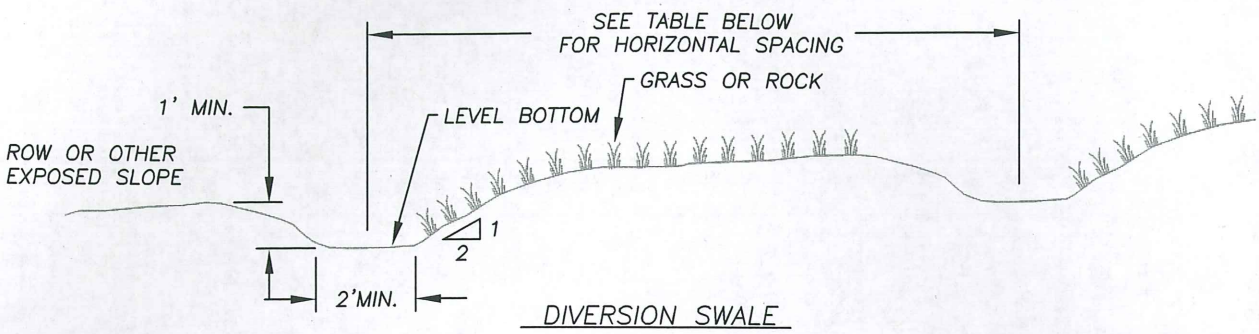

DIVERSION SWALE

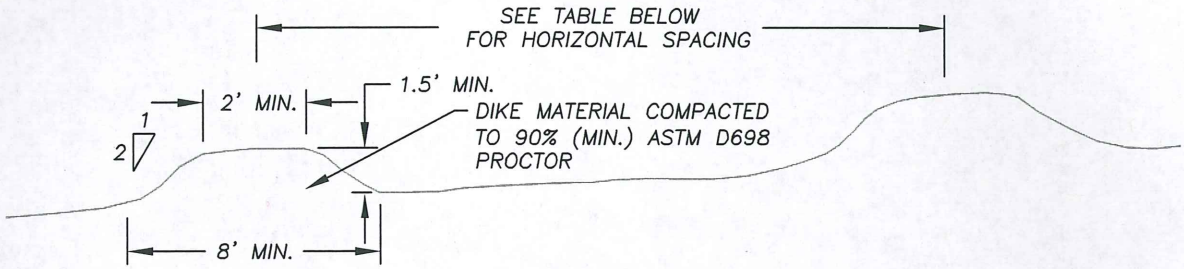

DIVERSION DIKE

NOTES:

1. REFER TO TABLES BELOW FOR DESIGN CRITERIA FOR DIVERSION DIKES AND SWALES.
2. FOR SLOPES OF ERODIBLE SOILS STEEPER THAN 2:1 WITH MORE THAN 10 FT. OF VERTICAL RELIEF, CONSTRUCT BENCHES OR SHORTEN DISTANCE BETWEEN DIKES AND SWALES.
3. DISCHARGE THE RUNOFF TO A STABLE CONVEYANCE THAT ROUTES THE SEDIMENT LADEN RUNOFF TO A SEDIMENT TRAP OR POND.
4. MAY NEED MATTING TO PROTECT SEED BED AND CHANNEL FROM EROSION.
5. REFER TO BMP C200 IN VOLUME II OF THE WESTERN WASHINGTON MANUAL FOR MORE INFORMATION.

DIVERSION SWALE DESIGN CRITERIA

GRADE	MAX. 5%	POSITIVE DRAINAGE TO OUTLET
HORIZONTAL SPACING	3–5%	300 ft
	5–10%	200 ft
	10–25%	100 ft
	25–50%	50 ft
SLOPE STABILIZATION	TEMPORARILY SEED OR LINE WITH RIPRAP 12" THICK AND PRESS INTO BANK ± 3–4"	
OUTLET	LEVEL SPREADER OR RIPRAP TO STABILIZED OUTLET/SEDIMENTATION POND	

DIVERSION DIKE DESIGN CRITERIA

DIKE GRADE	MIN. 0.5%, MAX. 1%	
HORIZONTAL SPACING	3–5%	300 ft
	5–10%	200 ft
	10–25%	100 ft
	25–50%	50 ft
SLOPE STABILIZATION	<5%	SEED AND MULCH WITHIN 5 DAYS FOLLOWING DIKE CONSTRUCTION
	5–40%	DEPENDENT OF RUNOFF VELOCITIES AND DIKE MATERIALS. STABILIZATION SHOULD BE DONE IMMEDIATELY USING EITHER SOD OR RIP–RAP OR OTHER MEASURES TO AVOID EROSION.
OUTLET	UPSLOPE SIDE OF DIKE PROVIDES POSITIVE DRAINAGE TO OUTLET, PROVIDE RIPRAP AS NECESSARY TO PREVENT EROSION RELEASE TO SEDIMENT TRAPPING FACILITY.	

N.T.S.

DIVERSION DIKE/SWALE

STANDARD DETAIL

THE CITY OF BATTLE GROUND

CITY OF BATTLE GROUND
APPROVED

Scott P. Sawyer 9-16-10

CITY ENGINEER DATE

REVISIONS:	DATE:	DRAWN:	DESIGNED:
1	8/12/98	BSG	GGH
2	8/30/05	ALL	MCH
3	9/15/10	RMJ	RMJ

EC–8.0

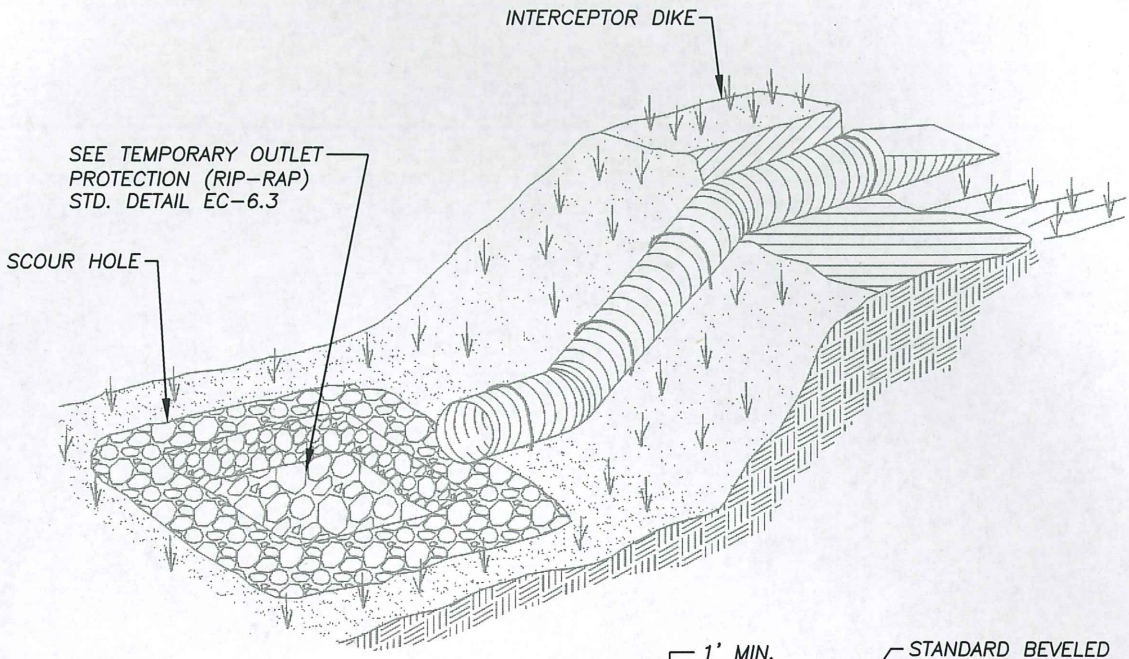

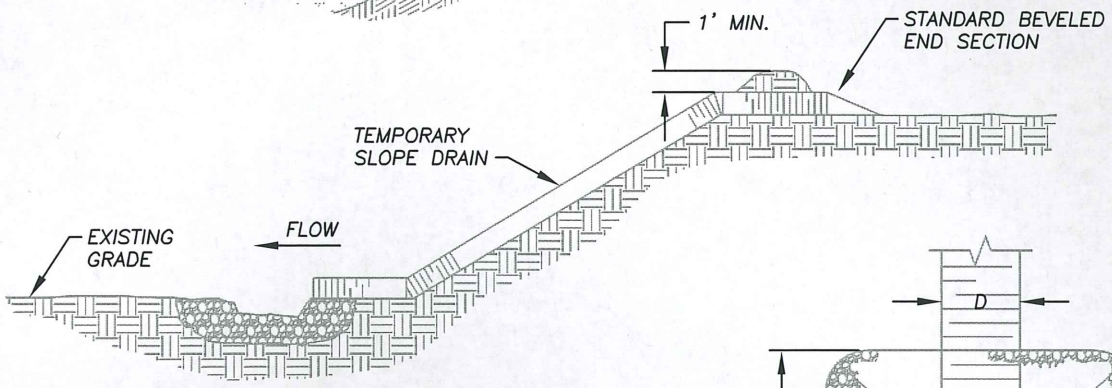

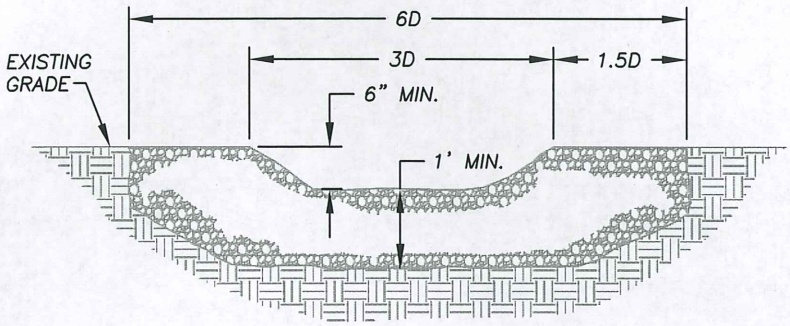

SCOUR HOLE DETAIL-FRONT VIEW

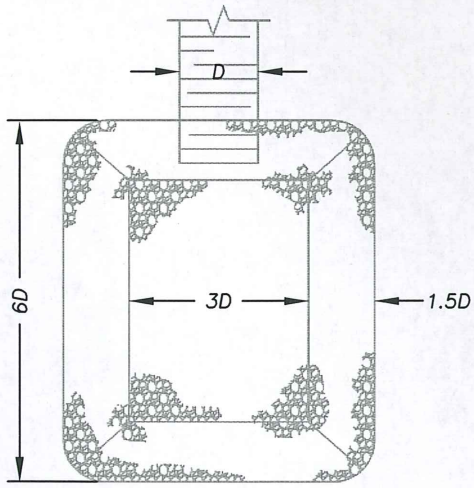

SCOUR HOLE DETAIL-TOP VIEW

NOTES:

1. REFER TO BMP C204 IN VOLUME II OF THE WESTERN WASHINGTON MANUAL FOR MORE INFORMATION.

N.T.S.

PIPE SLOPE DRAIN

STANDARD DETAIL

CITY OF BATTLE GROUND APPROVED

Scott P. Sawyer 9-16-10

CITY ENGINEER DATE

REVISIONS:	DATE:	DRAWN:	DESIGNED:
1	9/15/10	RMJ	RMJ

EC-8.1

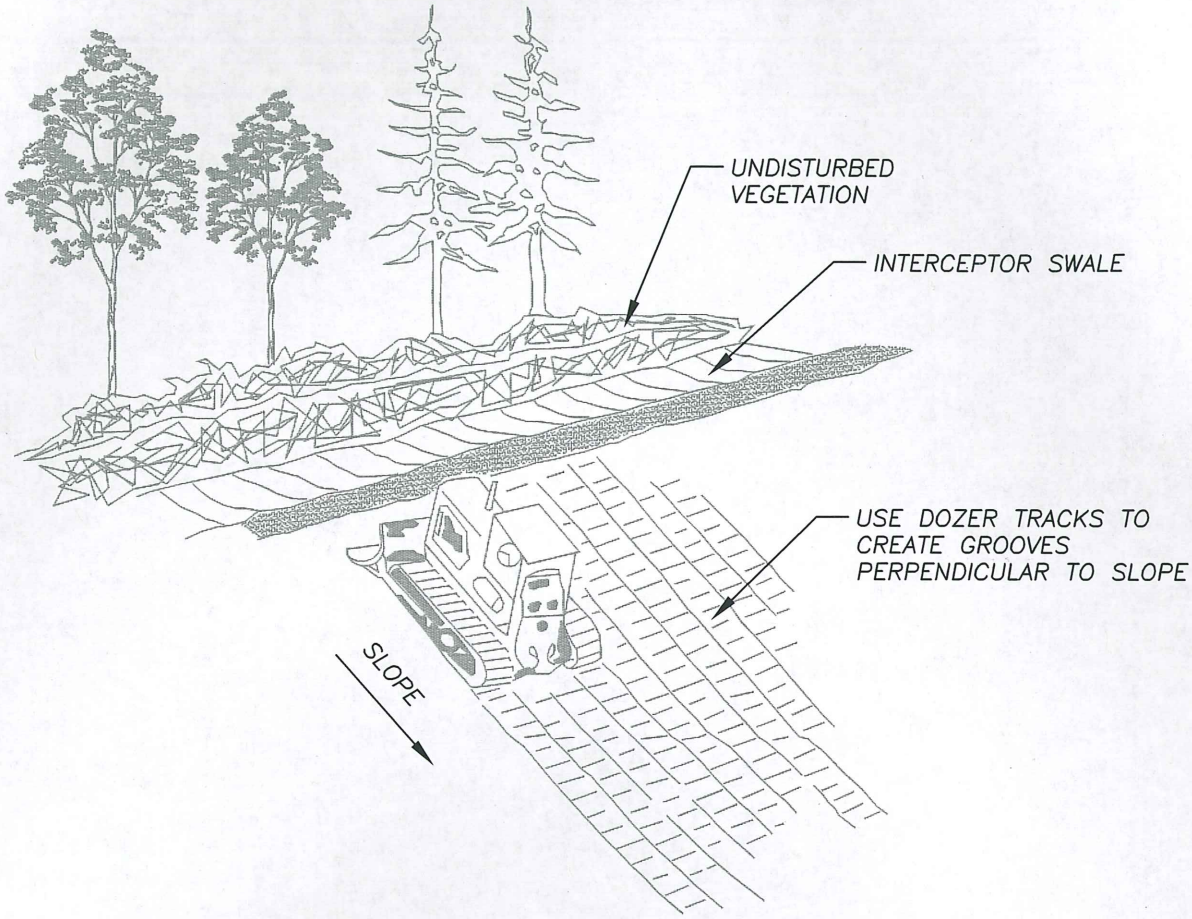

NOTES:

1. ALL SLOPES STEEPER THAN 3:1 AND GREATER THAN 5 VERTICAL FEET SHALL BE SURFACED ROUGHED.
2. AREAS WITH GRADES STEEPER THAN 3:1 SHALL BE ROUGHENED TO A DEPTH OF 2"–4" PRIOR TO SEEDING.
3. AREAS THAT WILL NOT BE STABILIZED IMMEDIATELY SHALL BE ROUGHENED TO REDUCE RUNOFF VELOCITY UNTIL SEEDING TAKES PLACES.
4. SLOPES WHERE MOWING IS PLANNED SHOULD NOT BE EXCESSIVELY ROUGHENED.
5. REFER TO BMP C130 IN VOLUME II OF THE WESTERN WASHINGTON MANUAL FOR MORE INFORMATION.

N.T.S.

SURFACE ROUGHENING (CAT TRACKING)					STANDARD DETAIL
THE CITY OF BATTLE GROUND	CITY OF BATTLE GROUND APPROVED	REVISIONS:	DATE:	DRAWN:	DESIGNED:	EC–8.2
		1	9/15/10	RMJ	RMJ	
	Scott R. Sawyer 9-16-10					
	CITY ENGINEER DATE					

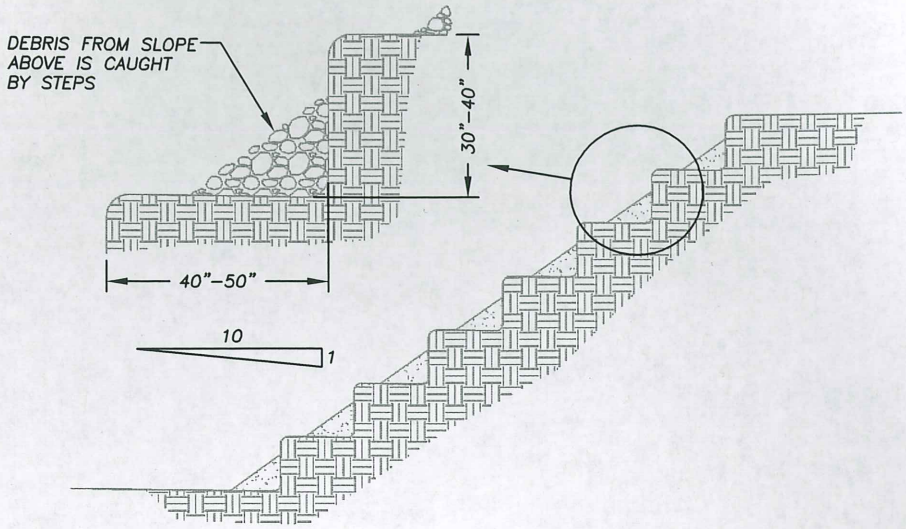

STAIR STEPPING CUT SLOPES

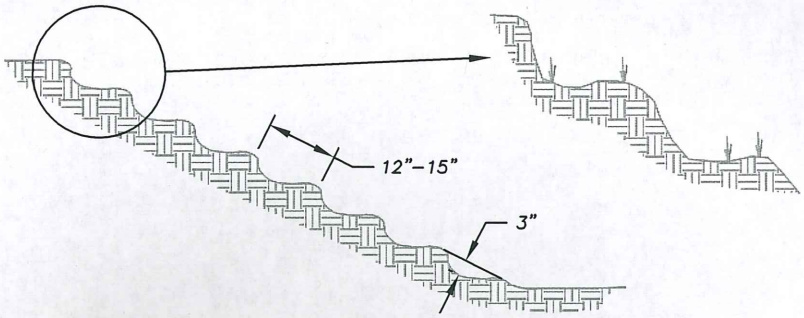

GROOVING IS CUTTING FURROWS ALONG THE CONTOUR OF A SLOPE. IRREGULARITIES IN THE SOIL SURFACE REDUCE RUNOFF VELOCITY, PROMOTE INFILTRATION, AND RETAIN LIME, FERTILIZER, AND SEED.

GROOVING SLOPES

NOTES:

1. ALL SLOPES STEEPER THAN 3:1 AND GREATER THAN 5 VERTICAL FEET SHALL BE SURFACED ROUGHED.
2. AREAS WITH GRADES STEEPER THAN 3:1 SHALL BE ROUGHENED TO A DEPTH OF 2"–4" PRIOR TO SEEDING.
3. AREAS THAT WILL NOT BE STABILIZED IMMEDIATELY SHALL BE ROUGHENED TO REDUCE RUNOFF VELOCITY UNTIL SEEDING TAKES PLACES.
4. SLOPES WITH A STABLE ROCK FACE DO NOT REQUIRE ROUGHENING.
5. SLOPES WHERE MOWING IS PLANNED SHOULD NOT BE EXCESSIVELY ROUGHENED.
6. REFER TO BMP C130 IN VOLUME II OF THE WESTERN WASHINGTON MANUAL FOR MORE INFORMATION.

N.T.S.

SURFACE ROUGHENING (STAIR STEPPING/GROOVING)

STANDARD DETAIL

THE CITY OF BATTLE GROUND

CITY OF BATTLE GROUND
APPROVED

Scott P. Sawyer 9-16-10

CITY ENGINEER DATE

REVISIONS:	DATE:	DRAWN:	DESIGNED:
1	9/15/10	RMJ	RMJ

EC–8.3