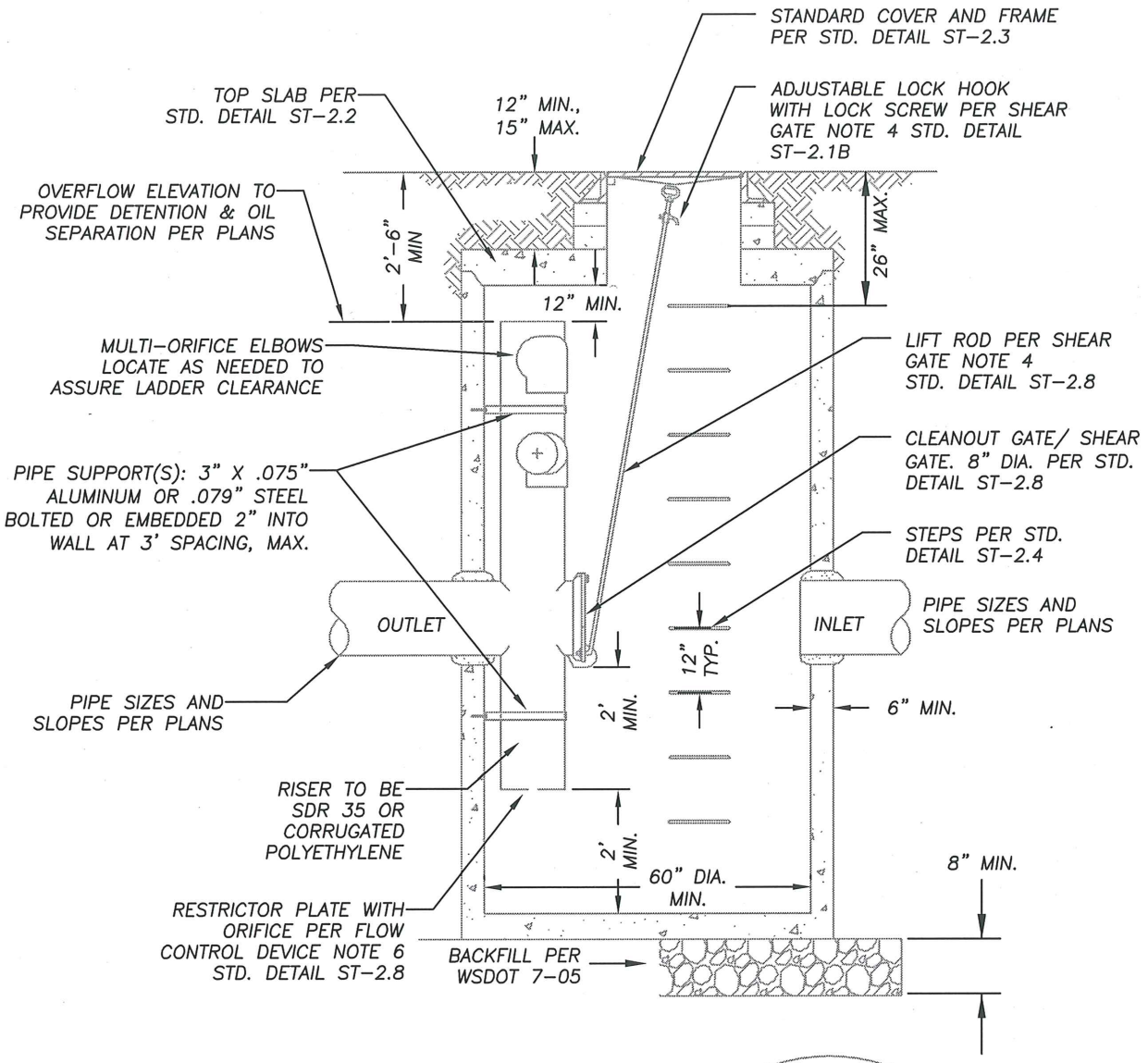

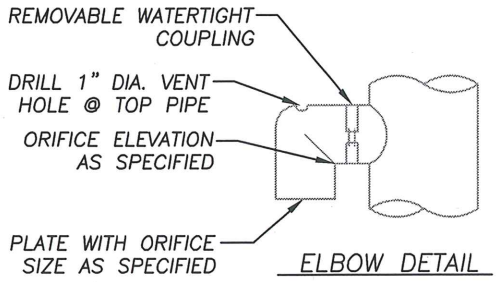

ELBOW DETAIL

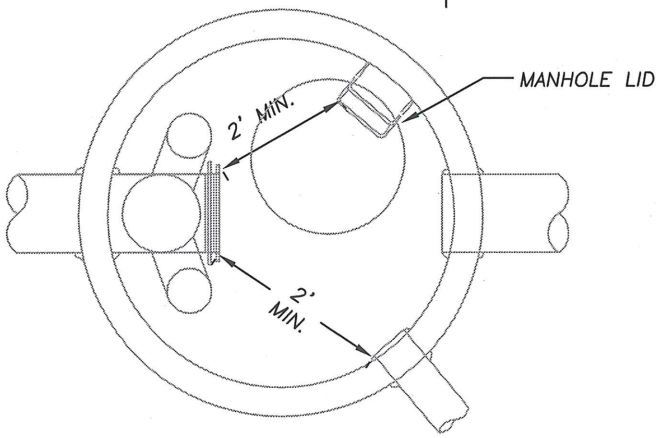

PLAN

FOR NOTES SEE STD. DETAIL ST-2.8

FLOW CONTROL MANHOLE (TEE TYPE)

STANDARD DETAIL

CITY OF BATTLE GROUND APPROVED

Scott P. Sawyer 11-30-11

CITY ENGINEER DATE

REVISIONS:	DATE:	DRAWN:	DESIGNED:
1	11/30/11	JMH	BGK

ST-2.6