NOTES:

1. ALL STEPS MUST MEET ASTM C-478 AND AASHTO M-199 SPECIFICATIONS, POLYPROPYLENE ASTM D4104-08, THE 1/2" GRADE 60 DEFORMED REINFORCING BAR ASTM A-615.
2. INSTALLATION METHOD MUST RESIST 1,500 LB. HORIZONTAL PULL OUT FORCE AND 500 LB. VERTICAL LOAD.

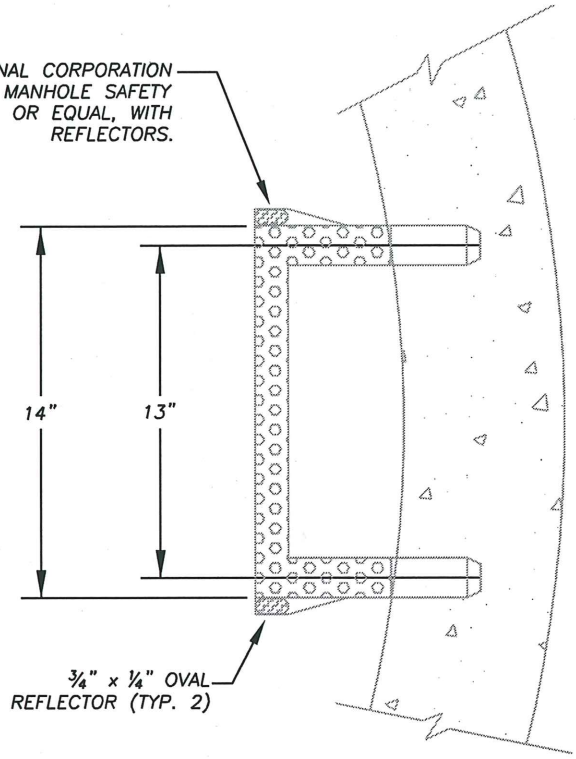

PLAN

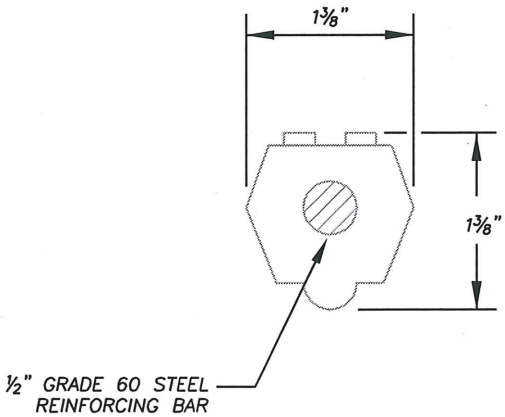

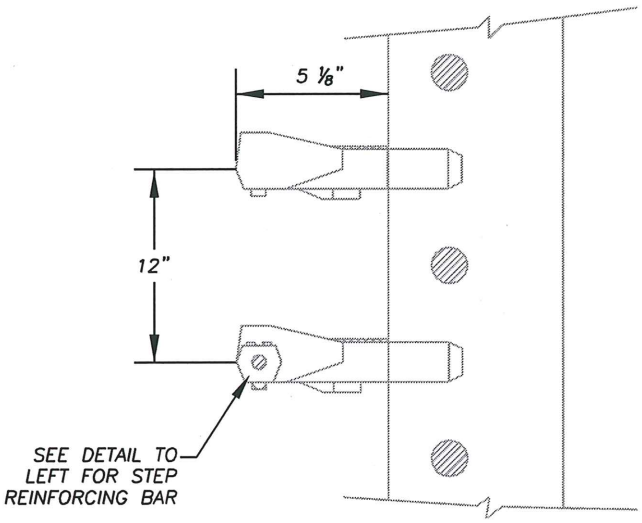

ELEVATION

N.T.S.

MANHOLE STEP

STANDARD DETAIL

THE CITY OF BATTLE GROUND

CITY OF BATTLE GROUND APPROVED

Scott P. Sawyer 7-21-09

CITY ENGINEER DATE

REVISIONS:	DATE:	DRAWN:	DESIGNED:
1	8/12/98	BSG	GGH
2	8/30/05	ALL	MCH
3	3/28/07	JMH	MCH
4	7/22/09	RMJ	RMJ

ST-2.4