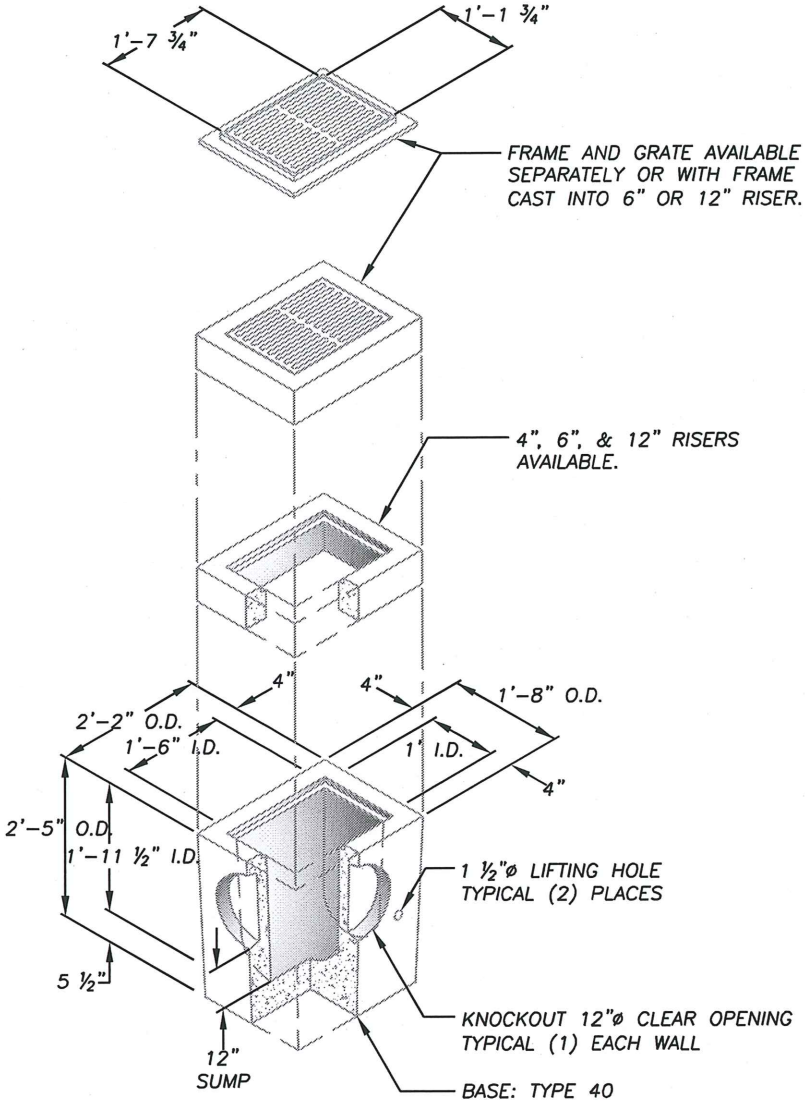

CONSTRUCTION NOTES:

1. IN OVER EXCAVATED AREAS PROVIDE SUPPORT FOR THE PIPE AS FOLLOWS: PLACE ¾" MINUS CRUSHED ROCK OVER UNDISTURBED GROUND IN 6" LAYERS AND COMPACT.
2. BACKFILL MATERIAL BELOW & TO SIDE OF STRUCTURE SHALL BE ASTM D2321 CLASS I OR II CRUSHED STONE OR GRAVEL, PLACED UNIFORMLY. BACKFILL TO MEET WSDOT 7-05 & AASHTO T-99 95% COMPACTION.
3. ALL DIMENSIONS SUBJECT TO ALLOWABLE SPECIFICATION TOLERANCES.
4. LATERALS WILL BE CONSTRUCTED TO ENTER THE STRUCTURE PERPENDICULAR TO THE WALL. THE LATERAL WILL ENTER ONLY AT THE LOCATION OF KNOCKOUT WITH NO LATERALS ALLOWED TO ENTER THE BASE AT THE CORNERS. IF NEEDED, A 45° BEND (MAX.) MAY BE USED WITHIN 5 FEET OF STRUCTURE.
5. GUTTER PAN TO BE UTILIZED PER STD. DETAIL ST-5.0.
6. INSTALL INLET STENCIL PER STD. DETAIL TR-8.09.
7. INSTALL REMOVABLE OUTLET TRAP OR EQUAL, SEE STD. DETAIL ST-5.1.
8. THE MAX. DEPTH FROM THE FINISHED GRADE TO THE PIPE INVERT IS 5'-0".
9. ANY PROTRUDING ENDS OF PIPES SHALL BE TRIMMED FLUSH WITH THE INSIDE WALLS AND GROUTED TO THE SATISFACTION OF ENGINEER.
10. LIFT HOLES MUST BE GROUTED.

STRUCTURE NOTES:

1. STRUCTURE TO BE CONSTRUCTED IN ACCORDANCE WITH ASTM C478 & C890 UNLESS SHOWN ON PLANS OR NOTED IN WSDOT STANDARD SPECIFICATIONS.
2. BASE CONCRETE SHALL BE 3000 P.S.I., 2-4 IN. SLUMP. FLOW LINES AND INSIDE SURFACES SHALL BE TROWELED SMOOTH & UNIFORM AT TIME OF POUR.
3. CAST-IN-PLACE, MONOLITHIC BASE UNIT MAY BE SUBSTITUTED WITH SPECIFIC APPROVAL OF THE ENGINEER.
4. ALL JOINTS SHALL BE GROUTED WITH PORTLAND CEMENT CONCRETE GROUT & STRUCK EVEN WITH THE WALL. RISERS SHALL BE PREMOLDED.
5. ALL REINFORCED STEEL SHALL HAVE 1 ½" CLEAR COVER UNLESS OTHERWISE NOTED, AND SHALL BE GRADE 60 (ASTM A615).
6. STEEL REINFORCED OR POLYPROPYLENE FIBER REINFORCED UNITS ARE ALLOWABLE.
7. MANUFACTURED GRATE AND FRAME SHALL BE PART OF THE ***BUY AMERICA*** PROGRAM PER 0605.GR1 OF THE WSDOT GENERAL SPECIAL PROVISIONS DIVISION 1.
8. BASE UNIT SHALL HAVE 12" SUMP BELOW INVERT OUT.

N.T.S.

CATCH BASIN (TYPE 40)

STANDARD DETAIL

THE CITY OF BATTLE GROUND

CITY OF BATTLE GROUND
APPROVED

Scott P. Sawyer 7-21-09
CITY ENGINEER DATE

REVISIONS:	DATE:	DRAWN:	DESIGNED:
1	8/12/98	BSG	GGH
2	8/30/05	ALL	MCH
3	7/22/09	RMJ	RMJ

ST-3.1