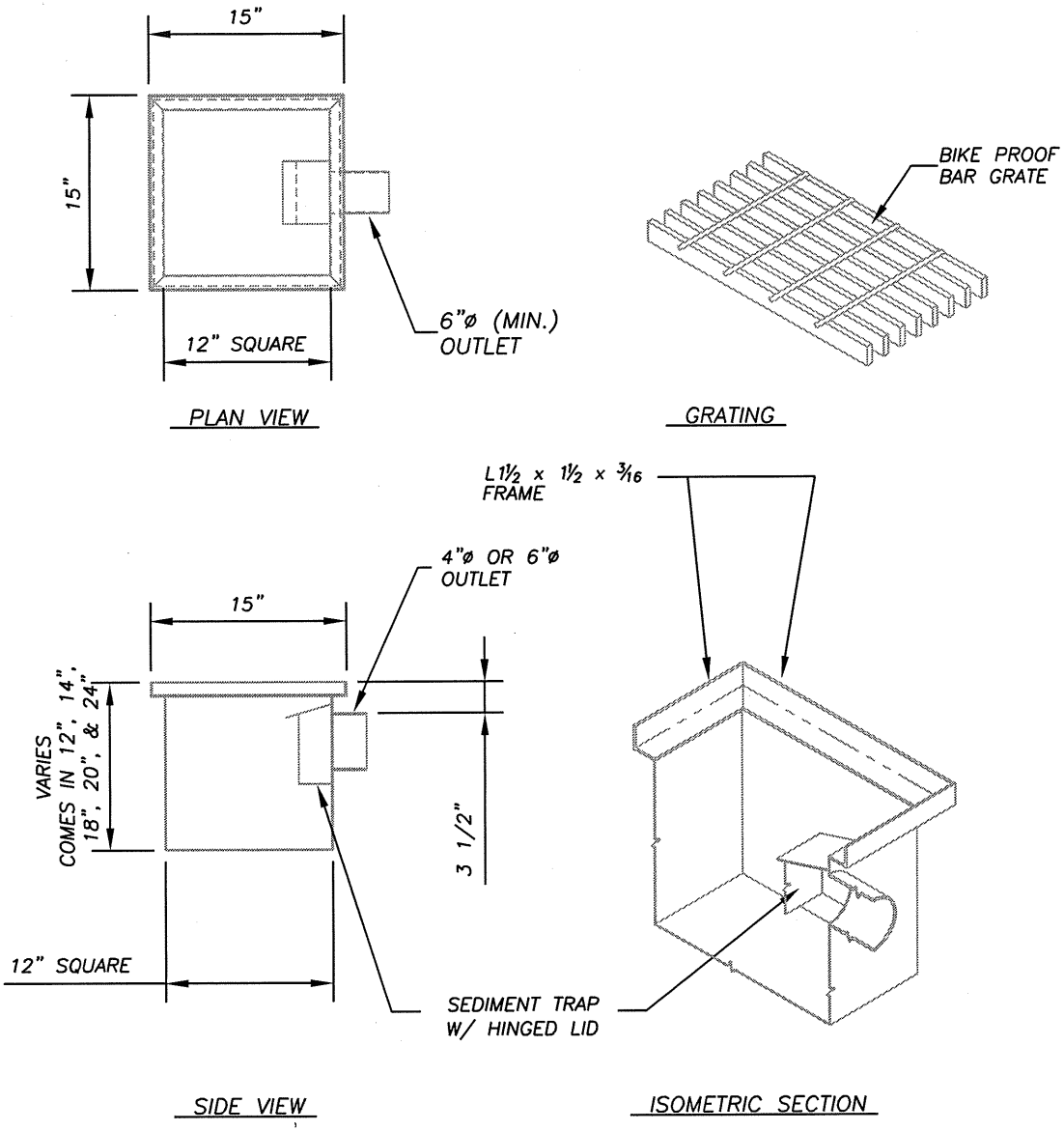

STATE APPROVED – ASPHALT DIPPED

NOTES:

1. THIS CATCH BASIN CAN BE USED IN AREAS OUTSIDE RIGHT OF WAY AND TRAVELED WAY OR AS APPROVED BY CITY ENGINEER.
2. BOX FABRICATED FROM 10 GA. MATERIAL

N.T.S.

CATCH BASIN (STEEL)

STANDARD DETAIL

THE CITY OF BATTLE GROUND

CITY OF BATTLE GROUND
APPROVED

Scott P. Sawyer 7-21-09
CITY ENGINEER DATE

REVISIONS:	DATE:	DRAWN:	DESIGNED:
1	7/22/09	RMJ	RMJ

ST-3.3