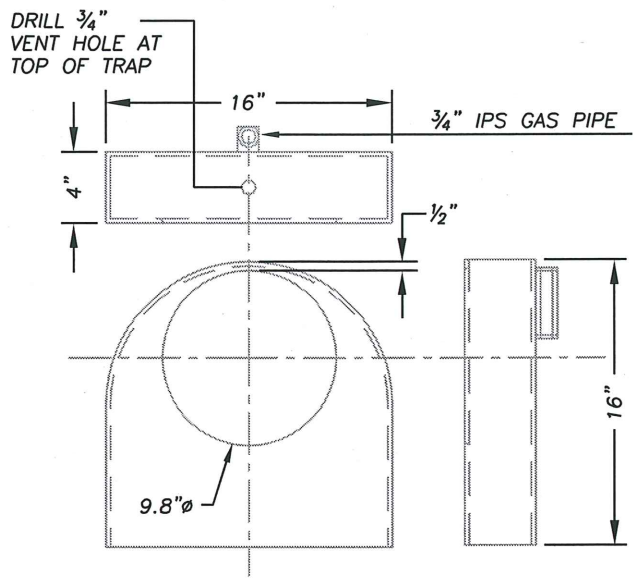

FF57575 MATERIAL HDPE

LOW PROFILE ELBOW

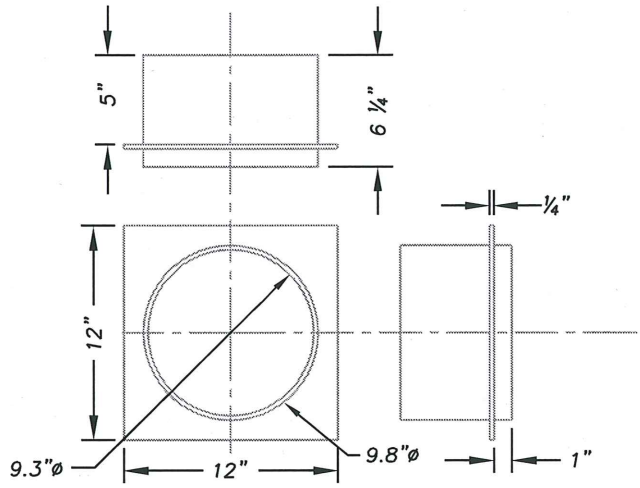

FF57576 MATERIAL HDPE

ELBOW INSERT

ZYMARK, ULTRATECH, BONAIR BRANDS OR EQUIVALENT

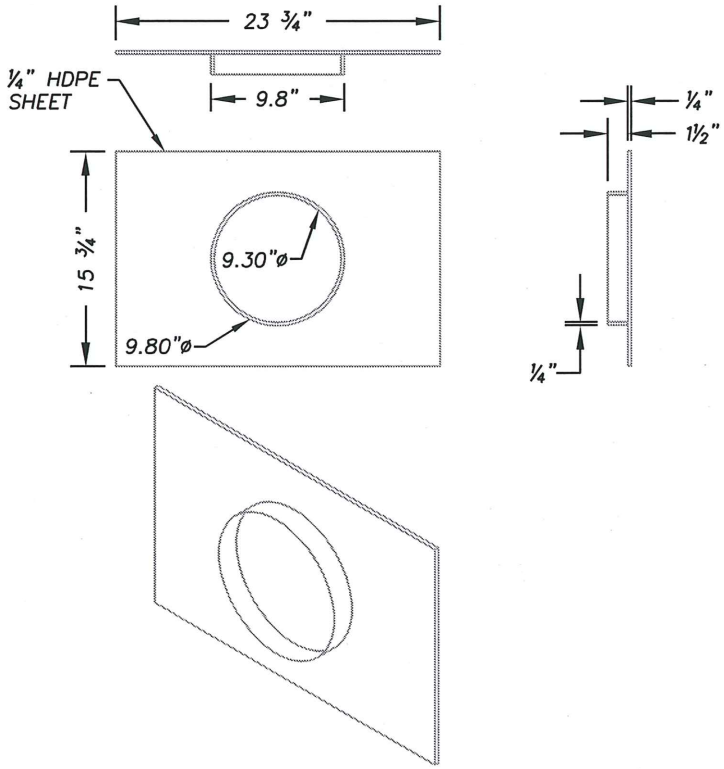

10" HDPE FLAT FACE ADAPTOR
FORD FABRICATIONS OR EQUIVALENT

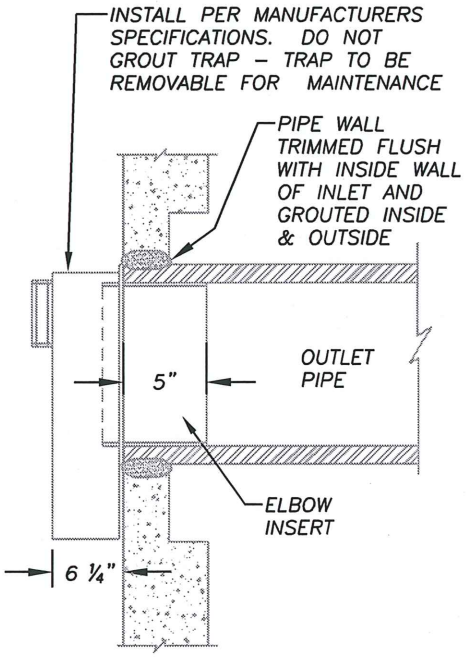

N.T.S.

OUTLET TRAP

STANDARD DETAIL

CITY OF BATTLE GROUND APPROVED

Scott P. Sawyer 7-21-09

CITY ENGINEER DATE

REVISIONS:	DATE:	DRAWN:	DESIGNED:
1	7/22/09	RMJ	RMJ

ST-5.1