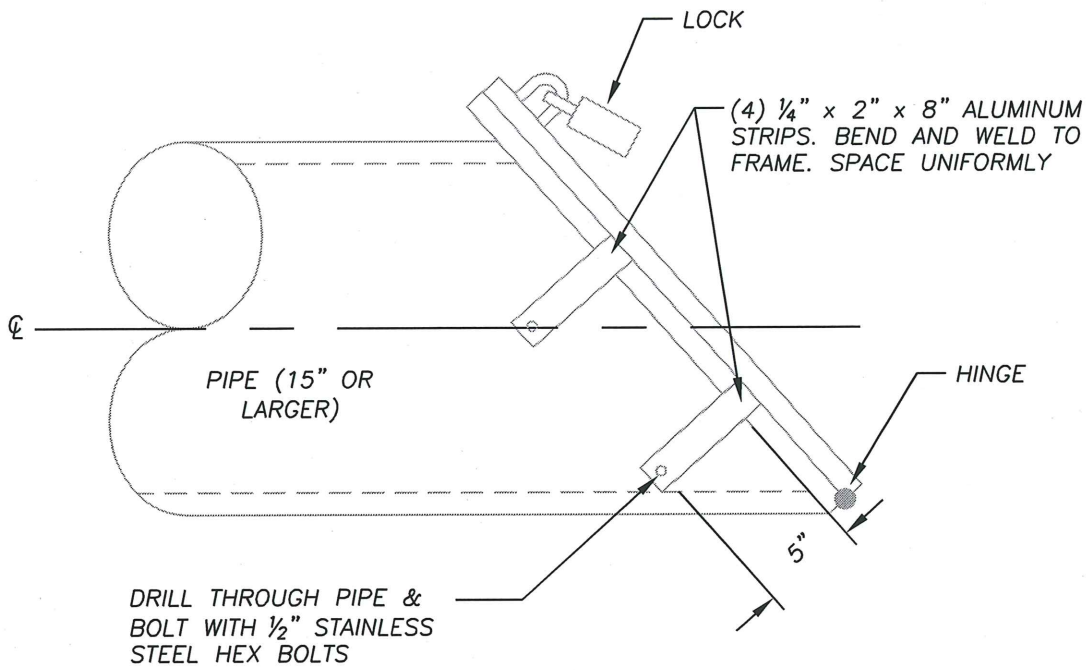

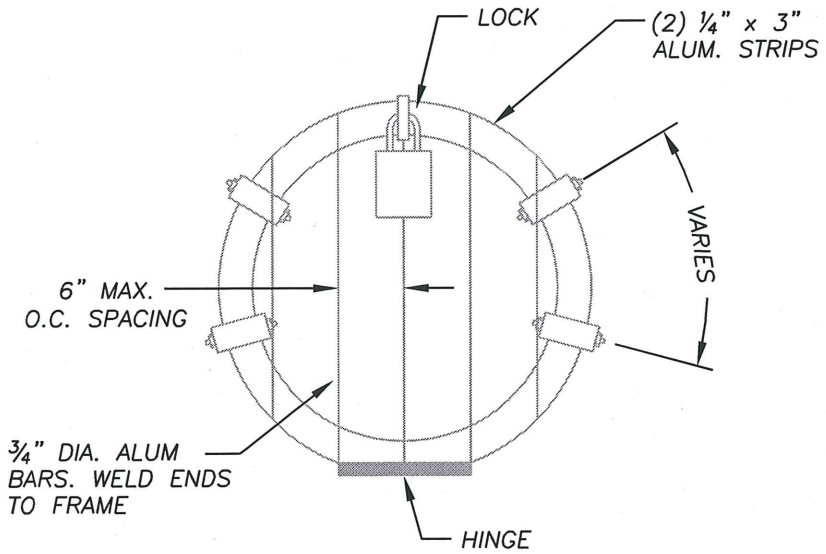

NOTES:

1. WELD ALL JOINTS.
2. SUBMITTAL SHOP DRAWING REQUIRED TO CITY INSPECTOR FOR REVIEW AND APPROVAL.
3. CONTRACTOR TO BE RESPONSIBLE FOR SUPPLYING LOCK. SPECIFICATIONS ON LOCK TO BE PROVIDED BY CITY INSPECTOR.

N.T.S.

TRASH SCREEN

STANDARD DETAIL

THE CITY OF BATTLE GROUND

CITY OF BATTLE GROUND
APPROVED

Scott P. Sawyer 7-21-09

CITY ENGINEER DATE

REVISIONS:	DATE:	DRAWN:	DESIGNED:
1	8/12/98	BSG	GGH
1	7/22/09	RMJ	RMJ

ST-6.6