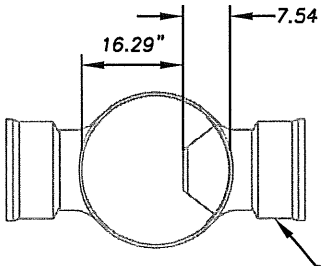

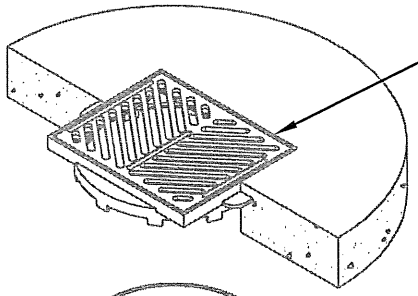

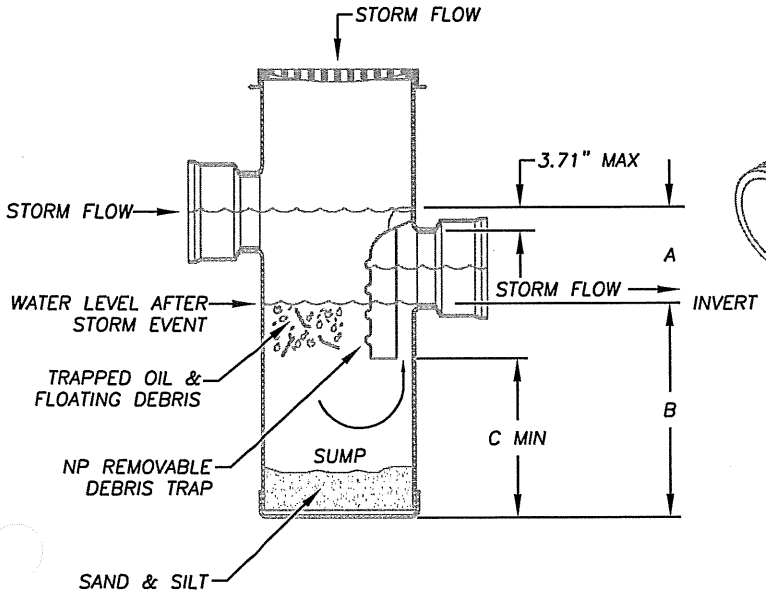

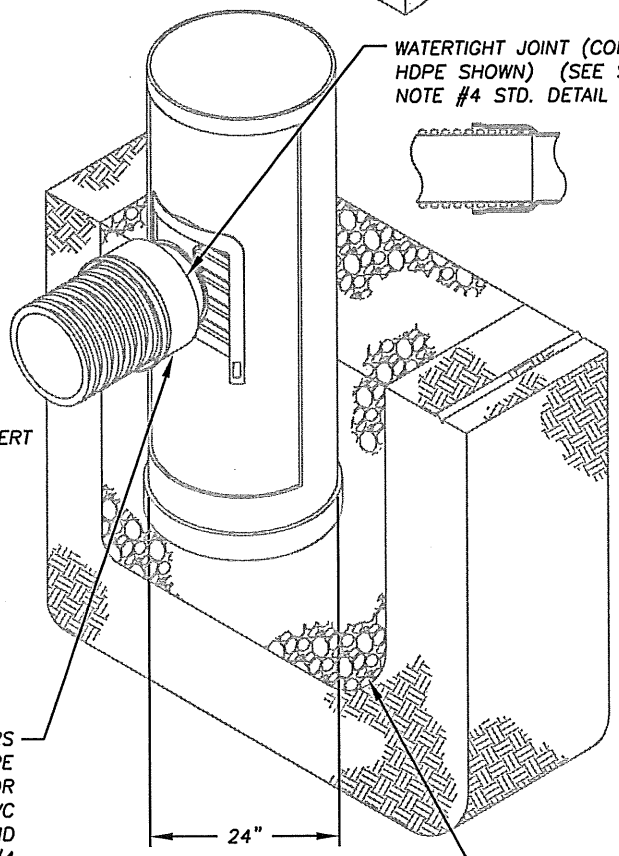

PERCENTAGE OF REMOVEABLE DEBRIS TRAP OPEN AREAS VS OUTLET PIPE OPEN AREA	
PIPE SIZE	PART # TBD
4"	537%
6"	251%
8"	141%
10"	90%
12"	61%

PIPE SIZE	A	B	C
4"	7.51	28.24	12.00
6"	9.25	26.50	12.00
8"	11.29	28.46	16.00
10"	13.21	30.54	20.00
12"	15.05	32.70	24.00

N.T.S.

DRAIN BASIN (NYLOPLAST OR EQUAL)

STANDARD DETAIL

CITY OF BATTLE GROUND

CITY OF BATTLE GROUND APPROVED

Scott P. Sawyer 3-2-10

CITY ENGINEER / DATE

REVISIONS:	DATE:	DRAWN:	DESIGNED:
1	7/22/09	RMJ	RMJ
2	3/2/10	RMJ	RMJ

ST-4.0A

CONSTRUCTION NOTES:

1. DRAIN BASIN SHALL BE LOCATED OUTSIDE RIGHT-OF-WAY UNLESS APPROVED BY CITY ENGINEER.
2. PVC SURFACE DRAINAGE INLETS SHALL INCLUDE THE DRAIN BASIN TYPE AS INDICATED ON THE CONTRACT DRAWING AND REFERENCED WITHIN THE CONTRACT SPECIFICATIONS.
3. THE DUCTILE IRON GRATES FOR EACH OF THESE FITTINGS ARE TO BE CONSIDERED AN INTEGRAL PART OF THE SURFACE DRAINAGE INLET AND SHALL BE FURNISHED BY THE SAME MANUFACTURER.
4. THE SURFACE DRAINAGE INLETS SHALL BE AS MANUFACTURED BY NYLOPLAST, A DIVISION OF ADVANCED DRAINAGE SYSTEMS, INC., OR PRIOR APPROVED EQUAL.
5. THE DRAIN BASINS REQUIRED FOR THIS CONTRACT SHALL BE MANUFACTURED FROM PVC PIPE STOCK, UTILIZING A THERMO-MOLDING PROCESS TO REFORM THE PIPE STOCK TO THE SPECIFIED CONFIGURATION.
6. THE DRAINAGE PIPE CONNECTION STUBS SHALL BE MANUFACTURED FROM PVC PIPE STOCK AND FORMED TO PROVIDE A WATERTIGHT CONNECTION WITH THE SPECIFIED PIPE SYSTEM.
7. THIS JOINT TIGHTNESS SHALL CONFORM TO ASTM D3212 FOR JOINTS FOR DRAIN AND SEWER PLASTIC PIPE USING FLEXIBLE ELASTOMERIC SEALS. THE FLEXIBLE ELASTOMERIC SEALS SHALL CONFORM TO ASTM F477.
8. THE PIPE BELL SPIGOT SHALL BE JOINED TO THE MAIN BODY OF THE DRAIN BASIN OR CATCH BASIN.
9. THE RAW MATERIAL USED TO MANUFACTURE THE PIPE STOCK THAT IS USED TO MANUFACTURE THE MAIN BODY AND PIPE STUBS OF THE SURFACE DRAINAGE INLETS SHALL CONFORM TO ASTM D1784 CELL CLASS 12454.
10. THE GRATES AND FRAMES FURNISHED FOR ALL SURFACE DRAINAGE INLETS SHALL BE DUCTILE IRON FOR SIZES 8", 10", 12", 15", 18", 24", AND 30" AND SHALL BE MADE SPECIFICALLY FOR EACH BASIN SO AS TO PROVIDE A ROUND BOTTOM FLANGE THAT CLOSELY MATCHES THE DIAMETER OF THE SURFACE DRAINAGE INLET.
11. GRATES FOR DRAIN BASINS SHALL BE CAPABLE OF SUPPORTING H-20 WHEEL LOADING FOR TRAFFIC AREAS OR H-10 LOADING FOR PEDESTRIAN AREAS.
12. THE SPECIFIED PVC SURFACE DRAINAGE INLET SHALL BE INSTALLED USING CONVENTIONAL FLEXIBLE PIPE BACKFILL MATERIALS AND PROCEDURES.
13. BEDDING AND BACKFILL FOR SURFACE DRAINAGE INLETS SHALL BE PLACED AND COMPACTED UNIFORMLY IN ACCORDANCE WITH ASTM D2321. THE DRAIN BASIN BODY WILL BE CUT AT THE TIME OF THE FINAL GRADE. NO BRICK, STONE OR CONCRETE BLOCK WILL BE REQUIRED TO SET THE GRATE TO THE FINAL GRADE HEIGHT.
14. FOR H-20 LOAD RATED INSTALLATIONS, A CONCRETE RING WILL BE POURED UNDER AND AROUND THE GRATE AND FRAME. THE CONCRETE SLAB MUST BE DESIGNED TAKING INTO THE CONSIDERATION LOCAL SOIL CONDITIONS, TRAFFIC LOADING, AND OTHER APPLICABLE DESIGN FACTORS.
15. FOR OTHER INSTALLATION CONSIDERATIONS SUCH AS MIGRATION OF FINES, GROUND WATER, AND SOFT FOUNDATIONS REFER TO ASTM D2321 GUIDELINES.

STRUCTURE NOTES:

1. REMOVABLE DEBRIS TRAP AVAILABLE WITH ALL 24" STRUCTURE OPTIONS (CUSTOM BASIN, ROAD & HIGHWAY, HERRINGBONE & CURB INLET).
2. 8" - 30" GRATES AND 12" - 30" FRAMES SHALL BE DUCTILE IRON PER ASTM A536 GRADE 70-50-05.
3. DRAIN BASIN TO BE CUSTOM MANUFACTURED ACCORDING TO PLAN DETAILS. RISERS ARE NEEDED FOR BASINS OVER 84" DUE TO SHIPPING RESTRICTIONS. (SEE NYLOPLAST DRAWING NO. 7001-110-065).
4. DRAINAGE CONNECTION STUB JOINT TIGHTNESS SHALL CONFORM TO ASTM D3212 FOR CORRUGATED HDPE (ADS & HANCOR DUAL WALL) & SDR 35 PVC.
5. ADAPTERS CAN BE MOUNTED ON ANY ANGLE 0° TO 360°. TO DETERMINE MINIMUM ANGLE BETWEEN ADAPTERS (SEE NYLOPLAST DRAWINGS NO. 7001-110-012, 7001-110-013, & 7001-110-014).
6. GRATES SHALL MEET H-10 LOAD RATING FOR 12" - 24" PEDESTRIAN.
7. GRATES SHALL MEET H-20 LOAD RATING FOR 30" PED & 12" - 30" STANDARD.
8. 8" & 10" PED/STD GRATES ARE RATED FOR LIGHT DUTY APPLICATIONS ONLY.
9. MANUFACTURED GRATES AND FRAMES SHALL BE PART OF THE ***BUY AMERICA*** PROGRAM PER 0605.GR1 OF THE WSDOT GENERAL SPECIAL PROVISIONS DIVISION 1.

FOR DETAIL SEE STD. DETAIL ST-4.0A

N.T.S.

DRAIN BASIN (NYLOPLAST OR EQUAL)

STANDARD DETAIL

THE CITY OF BATTLE GROUND

CITY OF BATTLE GROUND
APPROVED

Scott P. Sawyer 3-2-10
CITY ENGINEER DATE

REVISIONS:	DATE:	DRAWN:	DESIGNED:
1	7/22/09	RMJ	RMJ
2	3/2/10	RMJ	RMJ

ST-4.0B